TOSHIBA

FILE NO. 140-200514
(MFR'S VERSION A)

SERVICE MANUAL

COLOR TELEVISION/ VIDEO CASSETTE RECORDER/ DVD VIDEO PLAYER

MW20F51

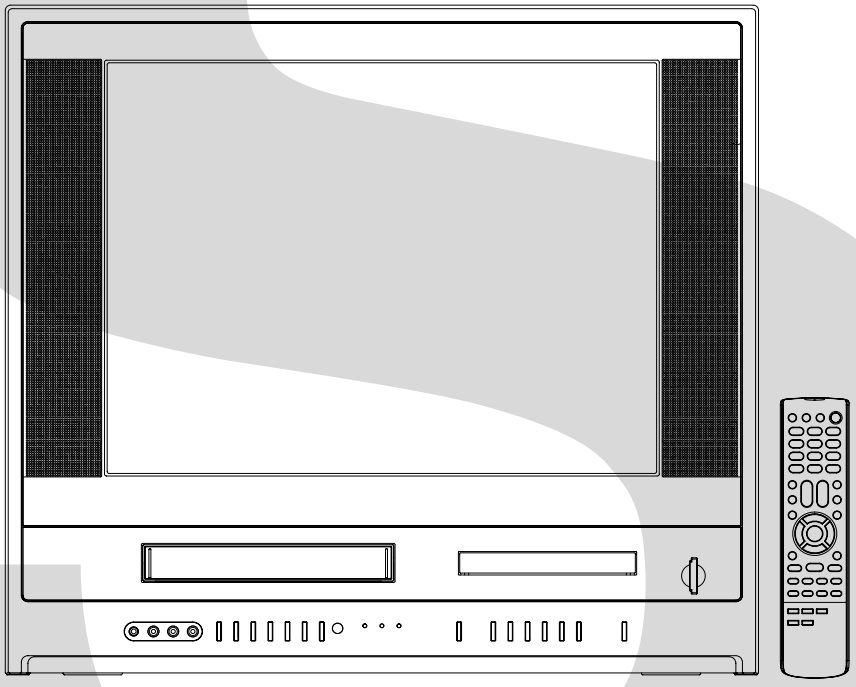

DOCUMENT CREATED IN JAPAN, May, 2005

CAUTION

THIS DIGITAL VIDEO PLAYER EMPLOYS A LASER SYSTEM.

TO ENSURE PROPER USE OF THIS PRODUCT, PLEASE READ THIS SERVICE MANUAL CAREFULLY AND RETAIN FOR FUTURE REFERENCE. SHOULD THE UNIT REQUIRE MAINTENANCE, CONTACT AN AUTHORIZED SERVICE LOCATION-SEE SERVICE PROCEDURE.

USE OF CONTROLS, ADJUSTMENTS OR THE PERFORMANCE OF PROCEDURES OTHER THAN THOSE SPECIFIED HEREIN MAY RESULT IN HAZARDOUS RADIATION EXPOSURE.

TO PREVENT DIRECT EXPOSURE TO LASER BEAM, DO NOT TRY TO OPEN THE ENCLOSURE. VISIBLE LASER RADIATION MAY BE PRESENT WHEN THE ENCLOSURE IS OPENED. DO NOT STARE INTO BEAM.

Location of the required Marking
The rating sheet and the safety caution are on the rear of the unit.

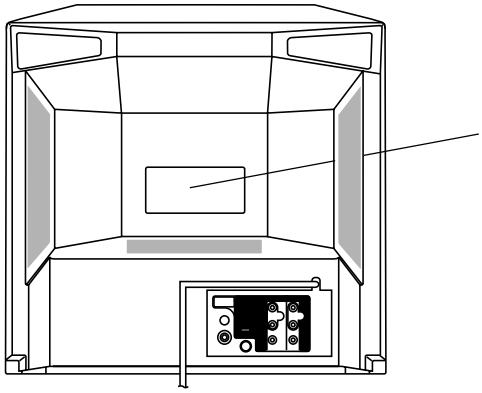

CERTIFICATION: COMPLIES WITH FDA RADIATION PERFORMANCE STANDARDS, 21 CFR SUBCHAPTER J.

PREPARATION OF SERVICING

The laser diode used for a pickup head may be destroyed with external static electricity.
Moreover, even if it is operating normally after repair, when static electricity discharge is received at the time of repair, the life of the product may be shortened.
Please perform the following measure against static electricity, be careful of destruction of a laser diode at the time of repair.

- Place the unit on a workstation equipped to protect against static electricity, such as conductive mat.
- Soldering iron with ground wire or ceramic type is used.
- A worker needs to use a ground conductive wrist strap for body.

SERVICING NOTICES ON CHECKING

1. KEEP THE NOTICES

As for the places which need special attentions, they are indicated with the labels or seals on the cabinet, chassis and parts. Make sure to keep the indications and notices in the operation manual.

2. AVOID AN ELECTRIC SHOCK

There is a high voltage part inside. Avoid an electric shock while the electric current is flowing.

3. USE THE DESIGNATED PARTS

The parts in this equipment have the specific characters of incombustibility and withstand voltage for safety. Therefore, the part which is replaced should be used the part which has the same character.
Especially as to the important parts for safety which is indicated in the circuit diagram or the table of parts as a ⚠ mark, the designated parts must be used.

4. PUT PARTS AND WIRES IN THE ORIGINAL POSITION AFTER ASSEMBLING OR WIRING

There are parts which use the insulation material such as a tube or tape for safety, or which are assembled in the condition that these do not contact with the printed board. The inside wiring is designed not to get closer to the pyrogenic parts and high voltage parts. Therefore, put these parts in the original positions.

5. TAKE CARE TO DEAL WITH THE CATHODE-RAY TUBE

In the condition that an explosion-proof cathode-ray tube is set in this equipment, safety is secured against implosion. However, when removing it or serving from backward, it is dangerous to give a shock. Take enough care to deal with it.

6. AVOID AN X-RAY

Safety is secured against an X-ray by considering about the cathode-ray tube and the high voltage peripheral circuit, etc.
Therefore, when repairing the high voltage peripheral circuit, use the designated parts and make sure not modify the circuit.
Repairing except indicates causes rising of high voltage, and it emits an X-ray from the cathode-ray tube.

7. PERFORM A SAFETY CHECK AFTER SERVICING

Confirm that the screws, parts and wiring which were removed in order to service are put in the original positions, or whether there are the portions which are deteriorated around the serviced places serviced or not. Check the insulation between the antenna terminal or external metal and the AC cord plug blades. And be sure the safety of that.

(INSULATION CHECK PROCEDURE)

1. Unplug the plug from the AC outlet.
2. Remove the antenna terminal on TV and turn on the TV.
3. Insulation resistance between the cord plug terminals and the eternal exposure metal **[Note 2]** should be more than 1M ohm by using the 500V insulation resistance meter **[Note 1]**.
4. If the insulation resistance is less than 1M ohm, the inspection repair should be required.

[Note 1]

If you have not the 500V insulation resistance meter, use a Tester.

[Note 2]

External exposure metal: Antenna terminal

HOW TO ORDER PARTS

Please include the following informations when you order parts. (Particularly the VERSION LETTER.)

1. MODEL NUMBER and VERSION LETTER
   The MODEL NUMBER can be found on the back of each product and the VERSION LETTER can be found at the end of the SERIAL NUMBER.
2. PART NO. and DESCRIPTION
   You can find it in your SERVICE MANUAL.

IMPORTANT SAFEGUARDS

1. **READ INSTRUCTIONS**
   All the safety and operating instructions should be read before the unit is operated.
2. **RETAIN INSTRUCTIONS**
   The safety and operating instructions should be retained for future reference.
3. **HEED WARNINGS**
   All warnings on the unit and in the operating instructions should be adhered to.
4. **FOLLOW INSTRUCTIONS**
   All operating and use instructions should be followed.
5. **CLEANING**
   Unplug this unit from the wall outlet before cleaning. Do not use liquid cleaners or aerosol cleaners. Use a damp cloth for cleaning.
6. **ATTACHMENTS**
   Do not use attachments not recommended by the unit's manufacturer as they may cause hazards.
7. **WATER AND MOISTURE**
   Do not use this unit near water. For example, near a bathtub, washbowl, kitchen sink, or laundry tub, in a wet basement, or near a swimming pool.
8. **ACCESSORIES**
   Do not place this unit on an unstable cart, stand, tripod, bracket, or table. The unit may fall, causing serious injury, and serious damage to the unit. Use only with a cart, stand, tripod, bracket, or table recommended by the manufacturer.

PORTABLE CART WARNING
(symbol provided by RETAC)

S3125A

8A. An appliance and cart combination should be moved with care. Quick stops, excessive force, and uneven surfaces may cause the appliance and cart combination to overturn.

9. **VENTILATION**
   Slots and openings in the cabinet and in the back or bottom are provided for ventilation, to ensure reliable operation of the unit, and to protect it from overheating. These openings must not be blocked or covered. The openings should never be blocked by placing the unit on a bed, sofa, rug, or other similar surface. This unit should never be placed near or over a radiator or heat source. This unit should not be placed in a built-in installation such as a bookcase or rack unless proper ventilation is provided or the manufacturer's instructions have been adhered to.
10. **POWER SOURCES**
    This unit should be operated only from the type of power source indicated on the rating plate. If you are not sure of the type of power supply to your home, consult your appliance dealer or local power company. For units intended to operate from battery power, or other sources, refer to the operating instructions.
11. **GROUNDING OR POLARIZATION**
    This unit is equipped with a polarized alternating-current line plug (a plug having one blade wider than the other). This plug will fit into the power outlet only one way. This is a safety feature. If you are unable to insert the plug fully into the outlet, try reversing the plug. If the plug should still fail to fit, contact your electrician to replace your obsolete outlet. Do not defeat the safety purpose of the polarized plug. If your unit is equipped with a 3-wire grounding-type plug, a plug having a third (grounding) pin, this plug will only fit into a grounding-type power outlet. This too, is a safety feature. If you are unable to insert the plug into the outlet, contact your electrician to replace your obsolete outlet. Do not defeat the safety purpose of the grounding-type plug.
12. **POWER-CORD PROTECTION**
    Power-supply cords should be routed so that they are not likely to be walked on or pinched by items placed upon or against them, paying particular attention to cords at plugs, convenience receptacles, and the point where they exit from the appliance.
13. **LIGHTNING**
    To protect your unit from a lightning storm, or when it is left unattended and unused for long periods of time, unplug it from the wall outlet and disconnect the antenna or cable system. This will prevent damage to the unit due to lightning and power line surges.
14. **POWER LINES**
    An outside antenna system should not be located in the vicinity of overhead power lines or other electric light or power circuits, or where it can fall into such power lines or circuits. When installing an outside antenna system, extreme care should be taken to keep from touching such power lines or circuits, as contact with them might be fatal.
15. **OVERLOADING**
    Do not overload wall outlets and extension cords, as this can result in a risk of fire or electric shock.
16. **OBJECT AND LIQUID ENTRY**
    Do not push objects through any openings in this unit, as they may touch dangerous voltage points or short out parts that could result in fire or electric shock. Never spill or spray any type of liquid into the unit.

IMPORTANT SAFEGUARDS (CONTINUED)

17. OUTDOOR ANTENNA GROUNDING

If an outside antenna or cable system is connected to the unit, be sure the antenna or cable system is grounded so as to provide some protection against voltage surges and built-up static charges. Section 810 of the National Electrical Code, ANSI/NFPA 70, provides information with respect to proper grounding of the mast and supporting structure, grounding of the lead-in wire to an antenna discharge unit, size of grounding conductors, location of antenna discharge unit, connection to grounding electrodes, and requirements for the grounding electrode.

18. SERVICING

Do not attempt to service this unit yourself as opening or removing covers may expose you to dangerous voltage or other hazards. Refer all servicing to qualified service personnel.

19. DAMAGE REQUIRING SERVICE

Unplug this unit from the wall outlet and refer servicing to qualified service personnel under the following conditions:

a. When the power-supply cord or plug is damaged.
b. If liquid has been spilled, or objects have fallen into the unit.
c. If the unit has been exposed to rain or water.
d. If the unit does not operate normally by following the operating instructions. Adjust only those controls that are covered by the operating instructions, as an improper adjustment of other controls may result in damage and will often require extensive work by a qualified technician to restore the unit to its normal operation.
e. If the unit has been dropped or the cabinet has been damaged.
f. When the unit exhibits a distinct change in performance, this indicates a need for service.

20. REPLACEMENT PARTS

When replacement parts are required, be sure the service technician uses replacement parts specified by the manufacturer or those that have the same characteristics as the original parts.
Unauthorized substitutions may result in fire, electric shock or other hazards.

21. SAFETY CHECK

Upon completion of any service or repairs to this unit, ask the service technician to perform safety checks to determine that the unit is in proper operating condition.

22. WALL OR CEILING MOUNTING

The product should be mounted to a wall or ceiling only as recommended by the manufacturer.

23. HEAT

The product should be situated away from heat sources such as radiators, heat registers, stoves, or other products (including amplifiers) that produce heat.

24. DISC TRAY

Keep your fingers well clear of the disc tray as it is closing. It may cause serious personal injury.

25. CONNECTING

When you connect the product to other equipment, turn off the power and unplug all of the equipment from the wall outlet. Failure to do so may cause an electric shock and serious personal injury. Read the owner's manual of the other equipment carefully and follow the instructions when making any connections.

26. SOUND VOLUME

Reduce the volume to the minimum level before you turn on the product. Otherwise, sudden high volume sound may cause hearing or speaker damage.

27. SOUND DISTORTION

Do not allow the product output distorted sound for a longtime. It may cause speaker overheating and fire.

28. HEADPHONES

When you use the headphones, keep the volume at a moderate level. If you use the headphones continuously with high volume sound, it may cause hearing damage.

29. LASER BEAM

Do not look into the opening of the disc tray or ventilation opening of the product to see the source of the laser beam. It may cause sight damage.

30. DISC

Do not use a cracked, deformed, or repaired disc. These discs are easily broken and may cause serious personal injury and product malfunction.

31. NOTE TO CATV SYSTEM INSTALLER

This reminder is provided to call the CATV system installer’s attention to Article 820-40 of the NEC that provides guidelines for proper grounding and, in particular, specifies that the cable ground shall be connected to the grounding system of the building, as close to the point of cable entry as practical.

IMPORTANT SAFEGUARDS (CONTINUED)

EXAMPLE OF ANTENNA GROUNDING AS PER THE NATIONAL ELECTRICAL CODE

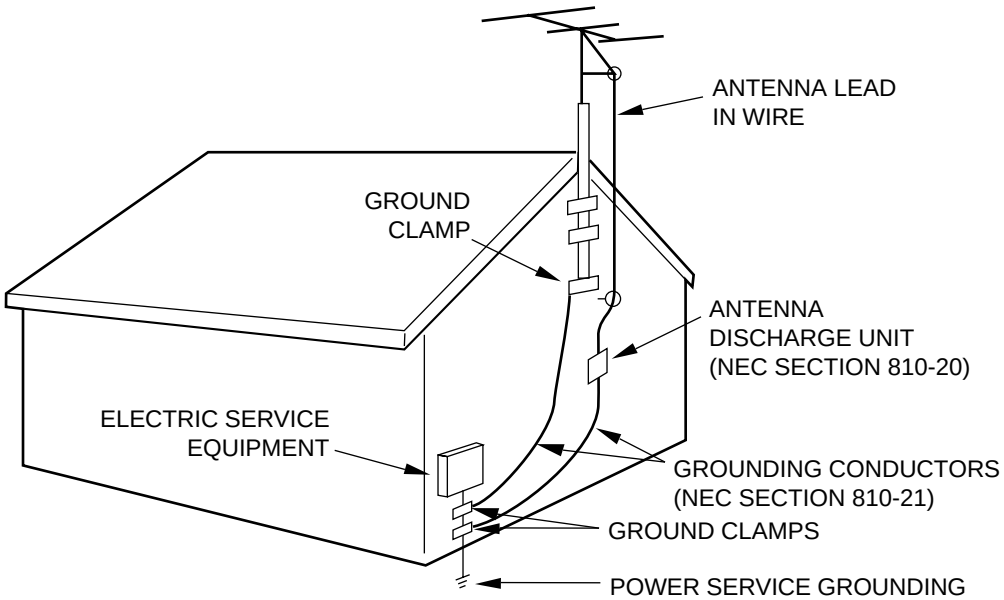

WHEN REPLACING DVD DECK

[When removing the DVD Deck]

Before removing Pick Up PCB and DVD PCB connector, short circuit the position shown in **Fig. 1** using a soldering iron. If you remove the DVD Deck with no soldering, the Laser may be damaged.

[When installing the DVD Deck]

Remove all the soldering on the short circuit position after the connection of Pick Up PCB and DVD PCB connector.

NOTE

- Before your operation, please read “PREPARATION OF SERVICING”.
- Use the Lead Free solder.
- Manual soldering conditions
  - Soldering temperature: 320 ± 20˚C
  - Soldering time: Within 3 seconds
  - Soldering combination: Sn-3.0Ag-0.5Cu
- When Soldering/Removing of solder, use the draw in equipment over the Pick Up Unit to prevent the Flux smoke from it.

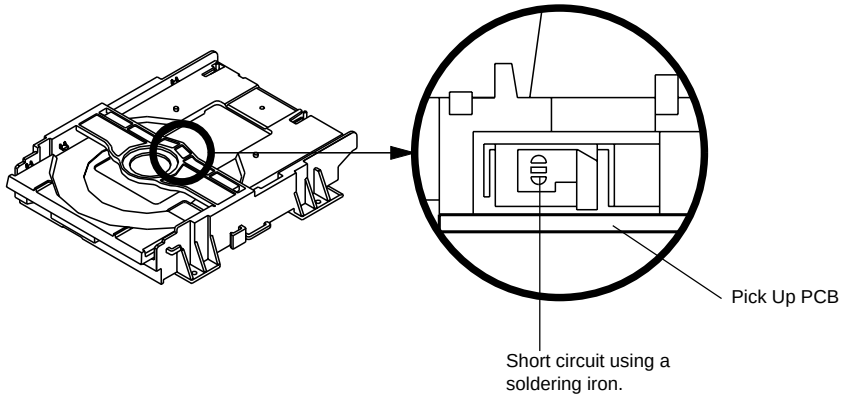

Fig. 1

TAPE REMOVAL METHOD AT NO POWER SUPPLY

1. Remove the TV/DVD/VCR block from the main unit as shown in **Fig. 1** below can be seen. **(Refer to item 1 of the DISASSEMBLY INSTRUCTIONS.)**
2. Remove the screw ① of the Deck Chassis and remove the Loading Motor.
3. Rotate the Pinch Roller Cam in the direction of the arrow by hand to slacken the Video Tape. **(Refer to Fig. 2)**
4. Rotate the Clutch Ass'y either direction to wind the Video Tape in the Cassette Case.
5. Repeat steps 3~4. Then take out the Video Cassette from the Deck Chassis. Be careful not to scratch the tape.

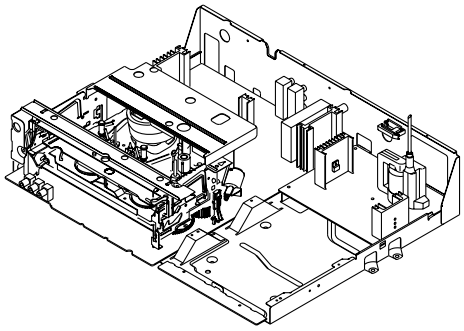

Fig. 1

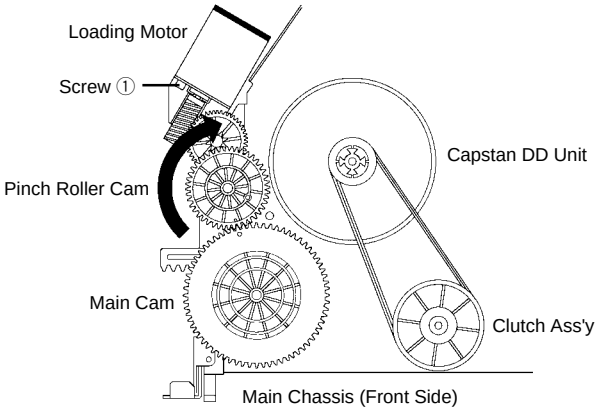

Fig. 2

DISC REMOVAL METHOD AT NO POWER SUPPLY

1. Remove the Back Cabinet and TV/DVD/VCR Block. **(Refer to item 1 of the DISASSEMBLY INSTRUCTIONS.)**
2. Rotate the Main Gear in the direction of the arrow by hand. **(Refer to Fig. 1)**
3. Manually open the Tray.

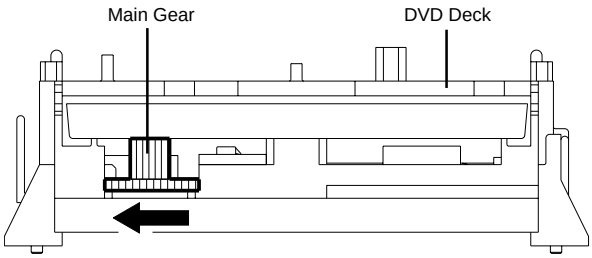

Fig. 1

PARENTAL CONTROL - RATING LEVEL

4 DIGIT PASSWORD CANCELLATION

If the stored 4 digit password in the Rating Level menu needs to be cancelled, please follow the steps below.

1. Turn Unit ON.
2. Set the DVD to the Stop Mode.
3. Check that 'No disc' is displayed on the screen.
4. Press and hold the 'STOP(DVD)' button on the front panel.
5. Simultaneously press and hold the '7' key on the remote control unit.
6. Hold both keys for more than 3 seconds.
7. The On Screen Display message 'PASSWORD CLEAR' will appear.
8. The 4 digit password has now been cleared.

TRAY LOCK

Tray cannot be opened by setting the Tray Lock, please follow the steps below.

1. Turn Unit ON.
2. Set the DVD to the Stop Mode.
3. Press and hold the 'STOP(DVD)' key on the front panel.
4. Simultaneously press and hold the '9' key on the remote control unit.
5. Hold both keys for more than 3 seconds.
6. Press the OPEN/CLOSE key on the front panel to check the Tray Lock setting.

NOTE: No indications on the screen when the Tray Lock is setting.

To unlock the Tray Lock, please follow the steps below.

1. Turn Unit ON.
2. Set the DVD to the Stop Mode.
3. Press and hold the 'STOP(DVD)' key on the front panel.
4. Simultaneously press and hold the '9' key on the remote control unit.
5. Hold both keys for more than 3 seconds.
6. The Tray Lock has now been cleared.

NOTE: No indications on the screen when the Tray Lock is setting.

It is likely to be going to be changed to the following steps without a previous notice in the future.
If the above is not effective measures, please follow the steps below.

Tray cannot be opened by setting the Tray Lock, please follow the steps below.

1. Turn Unit ON.
2. Set the DVD to the Stop Mode.
3. Press it in order of 'SETUP', 'SUBTITLE', '3', 'AUDIO SELECT' and '0' key of a remote control unit.
4. The On Screen Display message ' ⌂ ' will appear.
5. The Tray Lock has now been set up.

NOTE: No indications on the screen when the Tray Lock is setting.

To unlock the Tray Lock, please follow the steps below.

1. Turn Unit ON.
2. Set the DVD to the Stop Mode.
3. Press it in order of 'SETUP', 'SUBTITLE', '3', 'AUDIO SELECT' and '0' key of a remote control unit.
4. The On Screen Display message ' ⌂ ' will appear.
5. The Tray Lock has now been cleared.

NOTE: No indications on the screen when the Tray Lock is setting.

ABOUT LEAD FREE SOLDER (PbF)

Distinction of PbF PCB:

PCBs (manufactured) using lead free solder will have a PbF printing on the PCB.
(Please refer to figures.)

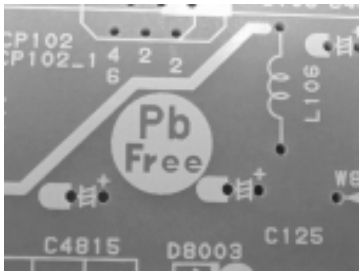

Caution:

- Pb free solder has a higher melting point than standard solder;
  Typically the melting point is 50°F~70°F(30°C~40°C) higher.
  Please use a soldering iron with temperature control and adjust it to 650°F ± 20°F (350°C ± 10°C).
  In case of using high temperature soldering iron, please be carefull not to heat too long.
- Pb free solder will tend to splash when heated too high (about 1100°F/ 600°C).
- All products with the printed circuit board with PbF printing must be serviced with lead free solder.
  When soldering or unsoldering, completely remove all of the solder from the pins or solder area,
  and be sure to heat the soldering points with the lead free solder until it melts sufficiently.

Recommendations

Recommended lead free solder composition is Sn-3.0Ag-0.5Cu.

TABLE OF CONTENTS

CAUTION A1-1
SERVICING NOTICES ON CHECKING A1-2
HOW TO ORDER PARTS A1-2
IMPORTANT SAFEGUARDS ..... A1-3~A1-5
WHEN REPLACING DVD DECK A1-6
TAPE REMOVAL METHOD AT NO POWER SUPPLY A1-7
DISC REMOVAL METHOD AT NO POWER SUPPLY A1-7
PARENTAL CONTROL RATING LEVEL A1-8
TRAY LOCK A1-8
ABOUT LEAD FREE SOLDER (PbF) A1-9
TABLE OF CONTENTS A2-1
GENERAL SPECIFICATIONS ..... A3-1~A3-8
DISASSEMBLY INSTRUCTIONS
1. REMOVAL OF MECHANICAL PARTS AND P. C. BOARDS ..... B1-1~B1-3
2. REMOVAL OF VCR DECK PARTS ..... B2-1~B2-6
3. REMOVAL OF DVD DECK PARTS ..... B3-1~B3-4
4. REMOVAL OF ANODE CAP B4-1
5. REMOVAL AND INSTALLATION OF FLAT PACKAGE IC B5-1, B5-2

KEY TO ABBREVIATIONS C1-1, C1-2
SERVICE MODE LIST C2-1
PREVENTIVE CHECKS AND SERVICE INTERVALS C3-1, C3-2
WHEN REPLACING EEPROM (MEMORY) IC C4-1
SERVICING FIXTURES AND TOOLS D1-1
PREPARATION FOR SERVICING D1-1
MECHANICAL ADJUSTMENTS ..... D2-1~D2-4
ELECTRICAL ADJUSTMENTS ..... D3-1~D3-6
BLOCK DIAGRAMS
DVD E-1, E-2
MEMORY CARD E-3, E-4
Y/C/AUDIO/HEAD AMP E-5, E-6
MICON E-7, E-8
IN/OUT E-9, E-10
CHROMA/IF E-11, E-12
SOUND AMP/SURROUND E-13, E-14
Hi-Fi/DEMODULATOR E-15, E-16
DIGITAL COMB FILTER E-17, E-18
DVD IN/OUT E-19, E-20
REGULATOR E-21, E-22
TV E-23, E-24

PRINTED CIRCUIT BOARDS
DVD F-1, F-2
VCR ..... F-3~F-6
DEFLECTION/CRT/OPERATION F-7, F-8
MEMORY CARD/LOADING MOTOR/SW F-9, F-10

SCHEMATIC DIAGRAMS
RF AMP/MOTOR DRIVE G-1, G-2
MPEG/MICON G-3, G-4
MEMORY G-5, G-6
MEMORY CARD1 ..... G-7, G-8
AUDIO/JACK G-9, G-10
Y/C/AUDIO/HEAD AMP G-11, G-12
MICON G-13, G-14
IN/OUT G-15, G-16
CHROMA/IF G-17, G-18
SOUND AMP/SURROUND G-19, G-20
Hi-Fi/DEMODULATOR G-21, G-22
DIGITAL COMB FILTER G-23, G-24
DVD IN/OUT G-25, G-26
REGULATOR1 ..... G-27, G-28
TV POWER G-29, G-30
DEFLECTION G-31, G-32
CRT/OPERATION G-33, G-34
MEMORY CARD2 ..... G-35, G-36
LOADING MOTOR/SW G-37, G-38

INTERCONNECTION DIAGRAM G-39, G-40
WAVEFORMS ..... H-1~H-3
MECHANICAL EXPLODED VIEWS ..... I1-1~I1-3
CHASSIS EXPLODED VIEWS I2-1, I2-2
DVD DECK EXPLODED VIEWS I3-1
MECHANICAL REPLACEMENT PARTS LIST J1-1, J1-2
CHASSIS REPLACEMENT PARTS LIST J2-1
DVD DECK REPLACEMENT PARTS LIST J3-1
ELECTRICAL REPLACEMENT PARTS LIST ..... J4-1~J4-7

GENERAL SPECIFICATIONS

G-1	**TV System**	CRT		CRT Size / Visual Size	20 inch / 508.0mmV
				CRT Type	Flat
				Magnetic Field BV/BH	+0.45G / 0.18G
		Color System			NTSC
		Speaker			2 Speaker
				Position	Front
				Size	1.8 x 3.9 Inch
				Impedance	8 ohm
		Sound Output		MAX	1.5W + 1.5W
				10%(Typical)	—
G-2	**VCR System**	System			VHS Player / Recorder
		Video System			NTSC
		Hi-Fi STEREO			Yes
		NTSC PB			-
		Deck			OVD-7
		Heads	Video Head		4 Heads
			FM Audio Head		2 Heads
			Audio /Control		Mono /Yes
			Erase(Full Track Erase)		Yes
		Tape Speed	Rec	PAL	-
				NTSC	SP/SLP(EP)
			Play	PAL	-
				NTSC	SP/SLP(EP)
		Fast Forward / Rewind Time (Approx.) at 25oC			FF:1'48"/REW:1'48"
				with Cassette	T-120
		Forward/Reverse Picture Search		NTSC or PAL-M	SP/SLP(EP)=3x,5x / 9x,15x
		Frame Advance			Yes
		Slow Speed			1/10
G-3	**DVD System**	Color System			NTSC
		Disc			DVD, CD-DA, CD-R/RW, Video CD DVD-R/RW (Video Format Only)
		Disc Diameter			120 mm , 80 mm
		Drive			DM3PA
		Search speed		Fwd	4 step
				Actual	2-120 times(DVD, VIDEO CD) 4-40 times (CD)
				Rev	4 step
				Actual	2-120 times(DVD, VIDEO CD) 4-40 times (CD)
		Slow speed			Fwd 1/7 - 1/2 times
				Actual	--
					Rev --
				Actual	--
G-4	**Tuning System**	Broadcasting System			US System M
		Tuner and Receive CH		System	1 Tuner
				Destination	US(w/CABLE)
				CH Coverage	2~69, 4A, A-5~A-1, A~I, J~W, W+1~W+84
		Intermediate Frequency		Picture(FP)	45.75MHz
				Sound(FS)	41.25MHz
				FP-FS	4.5MHz
		Preset CH			No
		Stereo/Dual TV Sound			US-Stereo
		Tuner Sound Muting			Yes

GENERAL SPECIFICATIONS

G-5	**Signal**	Video Signal	Input Level		1 V p-p/75 ohm
			Output Level		1 V p-p/75 ohm
			S/N Ratio (Weighted) at DVD Mode		65dB
			S/N Ratio (Weighted) at VCR Mode		50dB
			Horizontal Resolution at DVD Mode		400 Lines
			Horizontal Resolution at VCR(SP)Mode		220 Lines
		RGB Signal	Output Level		-
		Audio Signal	Input Level		-8.0dBm/50k ohm
		VCR	Output Level(0dB=0.775Vrms)		-8.0dBm/1k ohm
		DVD	Output Level(-20dBFs 0dBFs=2.0Vrms)		-12.0dBm/1k ohm
			Digital Output Level		0.5 V p-p/75 ohm(DVD)
			S/N Ratio at DVD (Weighted)		90 dB
			S/N Ratio at VCR (SP)(CCIR Filter:ON)		38 dB
			Harmonic Distortion at DVD Mode		0.06% (1kHz)
			Harmonic Distortion at VCR(SP) Mode		1.5% (1kHz) Typical
			Frequency Response :		
			DVD Mode	at DVD	4Hz - 22kHz
				at Video CD	4Hz - 20kHz
				at SVCD	-
				at CD	4Hz - 20kHz
			VCR Mode	at SP	100Hz - 10kHz
				at LP	-
				at SLP	100Hz - 4kHz
		Hi-Fi Audio Signal	Dynamic Range : More than		90 dB
			Frequency Response :		20Hz - 20kHz
			Wow And Flutter : Less than		0.01 %Wrms
			Channel Separation : More than		60 dB
			Harmonic Distortion : Less than		1.0 %
G-6	**Power**	Power Source	AC		120V,60Hz
			DC		-
		Power Consumption		at AC	110 W at 120 V 60 Hz
				at DC	-
			Stand by (at AC)		4 W at 120 V 60 Hz
			Per Year		-
		Protector	Power Fuse		Yes
			Safety Circuit		Yes
			IC Protector(Micro Fuse)		No
			Dew Sensor		No
G-7	**Regulation**		Safety		UL
			Radiation		FCC
			X-Radiation		DHHS
			Laser		DHHS
G-8	**Temperature**		Operation		5 oC - 40 oC
			Storage		-20 oC - 60 oC
G-9	**Operating Humidity**				Less than 80% RH

GENERAL SPECIFICATIONS

G-10	On Screen Display (TV/VCR)	Menu		Yes	
		Menu	Type	Icon	
		System Setup		Yes	
			Clock Set	Yes	
			On/Off Timer Set	Yes	
			Auto Clock On/Off	Yes	
			Standard Time	Yes	
			Daylight Saving Time	Yes	
		TV Setup		Yes	
			Language	Yes	
			Picture	Yes	
			Audio	Yes	
			Picture Preference	Yes	
		Channel Setup		Yes	
			TV/CABLE	Yes	
			Auto CH Memory	Yes	
			Add/ Delete	Yes	
		V-chip Setup		Yes	
		Tape Setup		Yes	
			Timer Rec Set	Yes	
			Auto Repeat On/Off	Yes	
		G-CODE(or SHOWVIEW or PLUSCODE)No. Entry			No
		Clock / Date		Yes	
		TV/VCR		Yes	
		DVD		Yes	
		CH/AV(LINE)		Yes	
		Tape Counter(Linear Counter)		Yes	
		Tape Speed		Yes	
		Sleep Time		Yes	
		Stereo/Audio Output		Yes	
			Bilingual		No
			SAP	Yes	
		Control Level	Volume	Yes	
			Brightness/Contrast/Sharpness/Color	Yes	
			Tint	Yes	
			Bass/Treble/Balance	Yes	
			Manual Tracking	Yes	
		Play/Stop/FF/Rew/Rec/OTR/T-Rec/Pause/Eject/Tape In (Symbol Mark)		Yes	
		Auto Tracking/Manual Tracking		Yes	
		Caption / Text		Yes	
		Index			No
		Mute		Yes	
		Hi-Fi		Yes	
		Repeat		Yes	
		Zero Return		Yes	
		DEW			No

GENERAL SPECIFICATIONS

G-11	**On Screen Display (DVD)**	Menu (DVD)			Yes	
		Menu Type			Icon	
		Language			Yes	
			Menu		Yes	
			Subtitle		Yes	
			Audio		Yes	
			OSD Language(Set up Language)			No
		Video			Yes	
			E.B.L. (Enhanced Black Level)			No
			TV Screen Size(4:3)		Yes	
			OSD Display On/Off		Yes	
			Picture Mode (Video/Film/Auto)		Yes	
			JPEG Interval		Yes	
		Audio			Yes	
			DRC (Dynamic Range Control)		Yes	
			Dialogue (On DRC[TV] / Off DRC[Std])			No
			Surround			No
		System			Yes	
			Disc/Card Slot			No
			Password Lock/ Un Lock		Yes	
			Parental		Yes	
			Select Files		Yes	
			HDMI (480p/1080i/720p)			No
			Output			No
		Open			Yes	
		Close			Yes	
		No Disc/ No Card			Yes	
		Reading Disc/ Reading Card			Yes	
		Play			Yes	
		Still/Pause			Yes	
		Stop			Yes	
		Prohibit Mark			Yes	
		PBC			Yes	
		Step			Yes	
		Skip(>>|)			Yes	
		Skip(|<<)			Yes	
		Random			Yes	(CD, VIDEO CD, MP3, WMA, JPEG)
		Repeat			Yes	
		Slow+			Yes	
		Slow-				No
		Search+			Yes	
		Search-			Yes	
		Jump			Yes	
		Resume			Yes	
		Title No.			Yes	
		Chapter No.			Yes	
		Track No.			Yes	
		Time			Yes	
		Sub Title No.			Yes	
		Angle No.			Yes	
		Vocal On/Off				No
		Audio No.			Yes	
		Audio Stereo L/R			Yes	(Video CD)
		Zoom			Yes	
		Marker No.				No
		Program Play Back			Yes	(CD, VIDEO CD, MP3, WMA, JPEG)
		Surround On/Off				No
		Screen Saver				No
		MP3, WMA, JPEG		Folder Name	Yes	
				File Name	Yes	
				File No	Yes	
				Time	Yes	(MP3, WMA Only)
				Track No	Yes	
G-12	**OSD Language**				English French Spanish	

GENERAL SPECIFICATIONS

G-13	**Clock,Timer and Timer Back-up**	Calendar		1990/1/1 ~ 2081/12/31
		Timer Events		8 Program/ 1 Month
		One Touch Recording Max Time		6 Hours
		Sleep Timer	Max Time	120 Min
			Step	10 Min
		On/Off Timer	Program(On Timer / Off Timer)	1 Program
		Auto Shut Off	No Signal	15 Min
			No Operation	- Min
		Timer Back-up (at Power Off Mode)		5 Sec
G-14	**Remote Control Unit**	Unit		RC-KH
		Glow in Dark Remocon		Yes
		Remocon Format		TOSHIBA
		Format		TOSHIBA
		Custom Code		40-BFh, 44-BBh, 45-Bah
		Power Source	Voltage(D.C)	3V
			UM size x pcs	UM-4 x 2 pcs
		Total Keys		49 Key
		Keys	TV/VCR	Yes
			DVD	Yes
			Power	Yes
			1	Yes
			2	Yes
			3	Yes
			4	Yes
			5	Yes
			6	Yes
			7	Yes
			8	Yes
			9	Yes
			0	Yes
			Channel-	Yes
			Channel+	Yes
			Volume-	Yes
			Volume+	Yes
			Display	Yes
			Sleep	Yes
			Audio Select	Yes
			Mute	Yes
			Channel Return / Skip-	Yes
			Closed Caption / Skip+	Yes
			TIMER REC	Yes
			Rec/OTR	Yes
			Slow+	Yes
			Play	Yes
			Stop	Yes
			REV(Rew)	Yes
			FF(F. Fwd)	Yes
			Pause / Still	Yes
			CM Skip / Jump	Yes
			Speed / Return	Yes
			Counter Reset / Angle	Yes
			Zero Return / Subtitle	Yes
			Input Select / Zoom	Yes
			Menu /Setup	Yes
			Program / Repeat A-B / DVD/Card	Yes
			D.Tracking / Top Menu	Yes
			Tracking+ / DVD Menu	Yes
			Tracking- / Play Mode	Yes
			Cancel	Yes
			Cursor Up	Yes
			Cursor Down	Yes
			Cursor Left	Yes
			Cursor Right	Yes
			Enter	Yes
			Open/Close	Yes
			Eject	Yes

GENERAL SPECIFICATIONS

G-15	Features (TV/VCR)	Auto Head Cleaning		Yes
		VIDEO PLUS+(SHOWVIEW,G-CODE)		No
		Auto Clock		Yes
		Picture Preference		Yes
		Auto Setup		Yes
		Forward / Reverse Picture Search		Yes
		Auto CH Memory		Yes
		Surround		Yes
		Stable Sound		Yes
		Closed Caption		Yes
		TV Auto Shut off Function		Yes
		End Call		No
		Index Search		No
		SQPB		No
		CABLE		Yes
		CM Skip(30sec x 6 Times)		Yes
		Comb Filter (2Lines)		Yes
		VM Circuit		No
		TV Monitor		No
		Program Extend		No
		Choke Coil		No
		Energy Star		No
		Protect of FBT Leak Circuit		Yes
		Zero Return		Yes
		Power On Memory		No
		V-chip USA V-chip		Yes
		CANADA V-chip		No
	Features (DVD)	Tray Lock		Yes
		Auto Stop	(Pause, and Resume Stop after 5min.)	Yes
		Card Slot Reading (Not secured Data)		Yes
			xD-Picture Card	Yes
			Memory Stick	Yes
			Multi Media Card	Yes
			SD Memory Card	Yes
			Compact Flash	No
			Micro Drive	No
			SmartMedia	No
		Video CD Playback		Yes
		SVCD Playback		No
		MP3 Playback		Yes
		WMA Playback		Yes
		JPEG Playback		Yes
		Digital Out	(Dolby Digital)	Yes
			(MPEG)	Yes
			(PCM)	Yes
			(DTS)	Yes
		Down Mix Out	(Dolby Digital)	Yes
			(DTS)	No
		3D Surround		No
		Screen Saver		No
		Audio DAC		192kHz / 24bit
		Copy (Disc to Tape)		Yes (by Conditioning)

GENERAL SPECIFICATIONS

G-16	**Accessories**	Owner's Manual		Language	English
				w/Guarantee Card	Yes
		Remote Control Unit			Yes
		Battery			Yes
				UM size x pcs	UM-4 x 2 pcs
				OEM Brand	No
		Rod Antenna			No
				Poles	-
				Terminal	-
		Loop Antenna			No
				Terminal	-
		U/V Mixer			No
		300 ohm to 75 ohm Antenna Adapter			Yes
		Antenna Change Plug			No
		DC Car Cord (Center+)			No
		AC Plug Adapter			No
		AC Cord			No
		AV Cord (2Pin-1Pin)			No
		Guarantee Card			No
		Registration Card			Yes
		ESP Card			No
		Warning Sheet			No
		Dew/AHC Caution Sheet			No
		Quick Set-up Sheet			No
		Circuit Diagram			No
		Service Facility List			No
		Important Safeguard			No
		Sheet Information (Return)			Yes
		Netflix Card			No
G-17	**Interface**	Switch	Front	Power (Tact)	Yes
				Channel Up	Yes
				Channel Down	Yes
				Volume Up	Yes
				Volume Down	Yes
				Play (VCR)	Yes
				Stop / Eject (VCR)	Yes
				F.FWD/Cue (VCR)	Yes
				Rew/Rev (VCR)	Yes
				REC/OTR (VCR)	Yes
				Play (DVD)	Yes
				Stop (DVD)	Yes
				Skip+ /Search+ (DVD)	Yes
				Skip- /Search- (DVD)	Yes
				Open/Close (DVD)	Yes
				Input Select	No
				Main Power SW	No
		Indicator		Power	Yes(Red)
				REC/OTR	Yes(Red)
				T-REC	Yes(Red)
				TV/VCR	No
				DVD	No
		Terminals	Front	Video Input	RCA x 1
				Audio Input	RCA x 2(Stereo)
				4 in 1 Card Slot	Yes (xD-Picture Card, Memory Stick, Multi Media Card, SD Memory Card)
				Compact Flash Card Slot	No
				Other Terminal	HeadPhone (Stereo & Mono, 3.5mm)
			Rear	Video Input	RCA x 1
				Audio Input	RCA x 2(Stereo)
				Video Output	RCA x1
				Audio Output	RCA x 2(Stereo)
				Digital Audio Output	Coaxial (DVD Only)
				VHF/UHF Antenna Input	F Type
				AC Inlet	No
G-18	**Set Size**			Approx. W x D x H (mm)	573 x 481 x 517
G-19	**Weight**			Net (Approx.)	27.0kg (59.5lbs)
				Gross (Approx.)	30.5kg (67.3lbs)

GENERAL SPECIFICATIONS

G-20	**Carton**	Master Carton		No
			Content	-
			Material	-
			Dimensions W x D x H(mm)	-
			Description of Origin	-
		Gift Box	Material	Double/White
			Dimensions W x D x H(mm)	658 x 575 x 625
			Description of Origin	Yes
		Drop Test	Natural Dropping At	1 Corner / 2 Edges / 4 Surfaces
			Height (cm)	60(ORION SPEC:31)
		Container Stuffing(40' container)		216 Sets
G-21	**Material**	Cabinet	Front	PS 94V0 DECABROM
			Rear	PS 94V0 DECABROM
			Jack Panel	-
		PCB	Non-Halogen Demand	No
			Eyelet Demand	Yes
G-22	**Environment**	Environmental standard requirement (by buyer)		Green procurement of TOSHIBA
			Pb-free	Phase3(Phase3A)

DISASSEMBLY INSTRUCTIONS

1. REMOVAL OF MECHANICAL PARTS AND P.C. BOARDS

1-1: BACK CABINET (Refer to Fig. 1-1)

1. Remove the 6 screws ①.
2. Remove the 2 screws ②.
3. Remove the Back Cabinet in the direction of arrow.

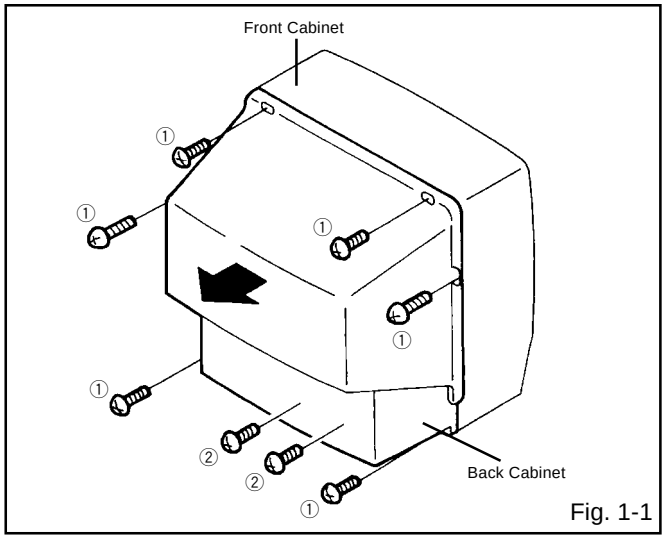

Fig. 1-1

1-2: CRT PCB (Refer to Fig. 1-2)

CAUTION: BEFORE REMOVING THE ANODE CAP, DISCHARGE ELECTRICITY BECAUSE IT CONTAINS HIGH VOLTAGE. BEFORE ATTEMPTING TO REMOVE OR REPAIR ANY PCB, UNPLUG THE POWER CORD FROM THE AC SOURCE.

1. Remove the Anode Cap.
   (Refer to REMOVAL OF ANODE CAP)
2. Disconnect the following connectors:
   (CP603B, CP803 and CP805).
3. Remove the CRT PCB in the direction of arrow.

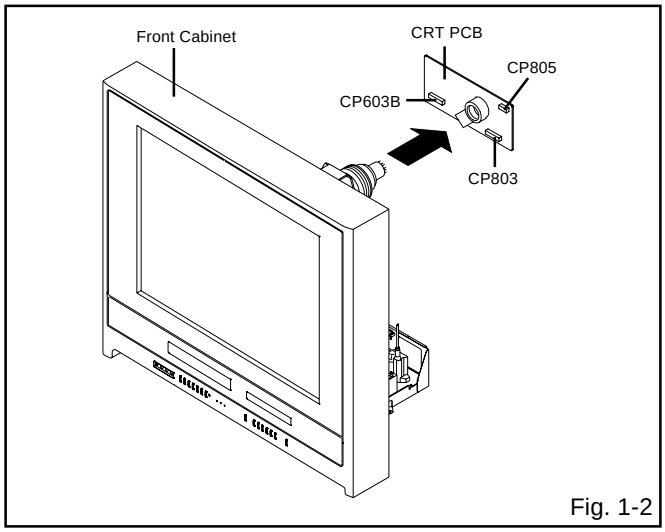

Fig. 1-2

1-3: TV/DVD/VCR BLOCK (Refer to Fig. 1-3)

1. Remove the 2 screws ①.
2. Disconnect the following connectors:
   (CP303, CP404, CP1704 and CP9604).
3. Remove the TV/DVD/VCR Block in the direction of arrow.

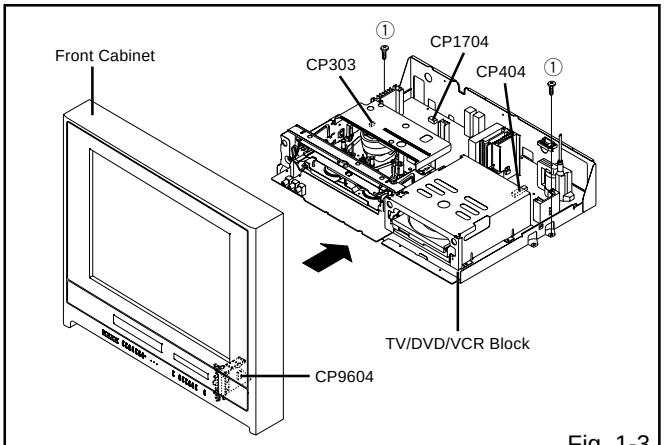

Fig. 1-3

1-4: MEMORY CARD PCB (Refer to Fig. 1-4)

1. Remove the screw ①.
2. Remove the Shield Card 2.
3. Remove the 4 screws ②.
4. Remove the Memory Card PCB in the direction of arrow.

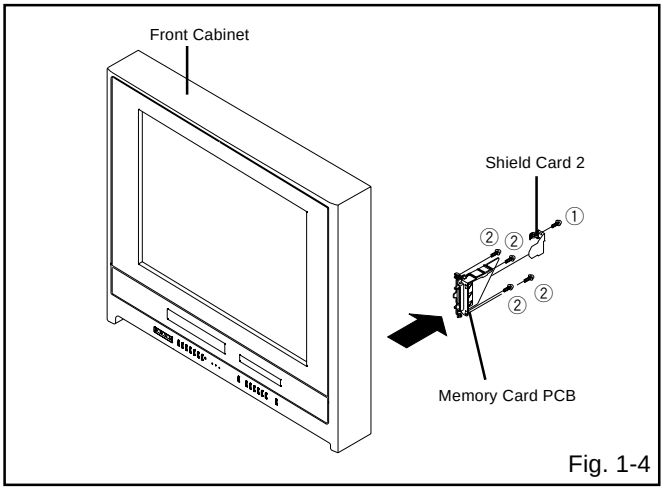

Fig. 1-4

DISASSEMBLY INSTRUCTIONS

1-5: VCR DECK (Refer to Fig. 1-5)

NOTE

Do not remove the cable at the FE Head section. The FE Head may be damaged if you remove the cable by force.

1. Remove the 2 screws ①.
2. Remove the VCR Top.
3. Move the Cassette Holder Ass'y to the back side.
4. Remove the 3 screws ②.
5. Remove the 2 screws ③.
6. Remove the screw ④.
7. Remove the Deck Shield Cover.
8. Remove the screw ⑤.
9. Remove the FE Head.
10. Disconnect the following connectors:
    (CP101, CP4501 and CP4502).
11. Remove the VCR Deck in the direction of arrow.

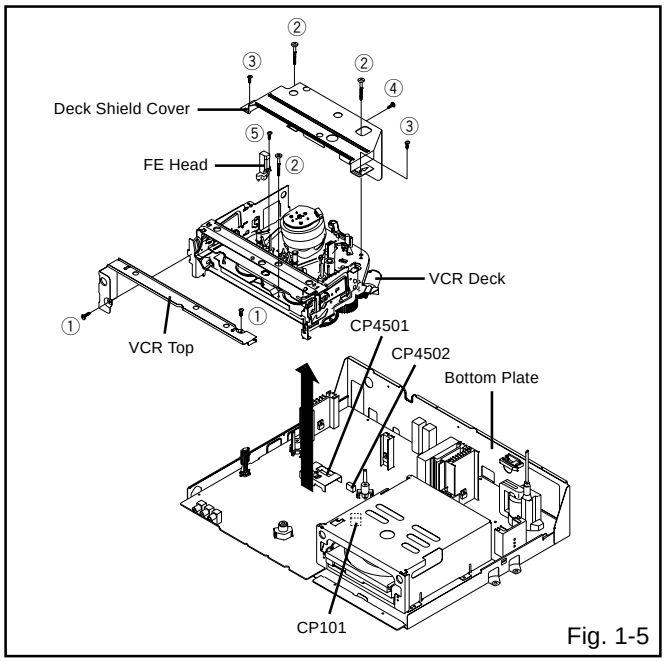

Fig. 1-5

1-6: VCR PCB (Refer to Fig. 1-6)

1. Remove the 6 screws ①.
2. Remove the screw ②.
3. Remove the AV Jack Shield.
4. Disconnect the following connectors:
   (CP001, CP602B, CP604, CP2201, CP8001 and CP8002).
5. Remove the VCR PCB in the direction of arrow.

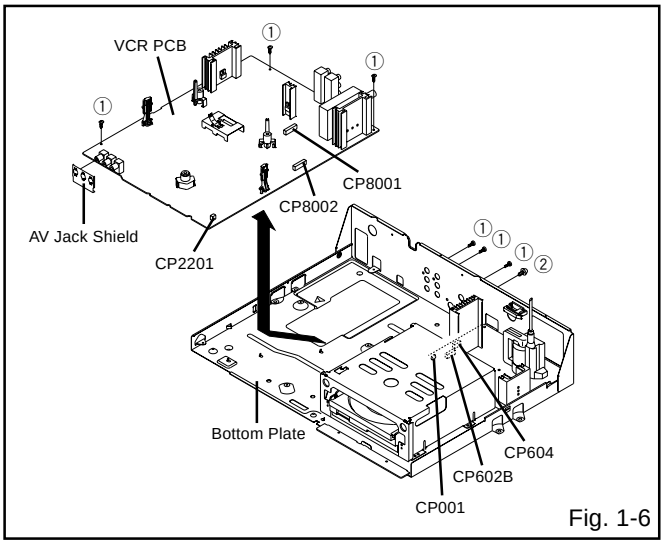

Fig. 1-6

1-7: DVD BLOCK/OPERATION PCB (Refer to Fig. 1-7)

1. Remove the 4 screws ①.
2. Remove the DVD Block in the direction of arrow (A).
3. Remove the 2 screws ②.
4. Remove the Operation PCB in the direction of arrow (B).

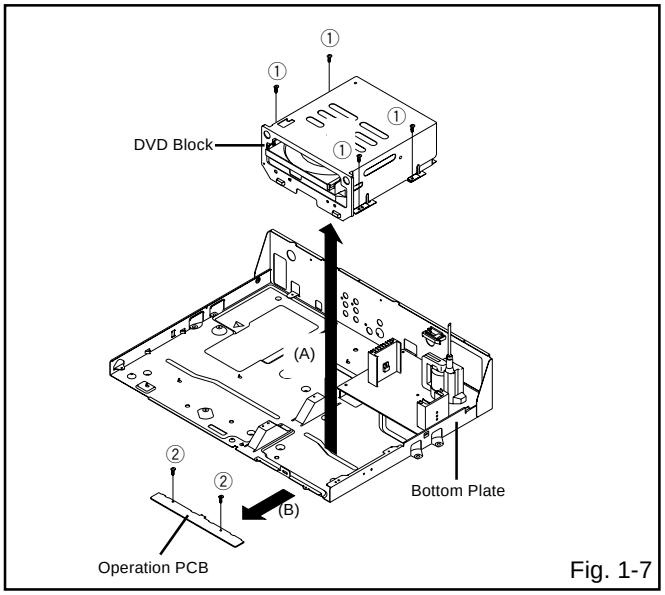

Fig. 1-7

DISASSEMBLY INSTRUCTIONS

1-8: DVD PCB/DVD DECK (Refer to Fig. 1-8)

1. Short circuit the position shown in **Fig. 1-8** using a soldering iron. If you remove the DVD Deck with no soldering, the Laser may be damaged.
2. Remove the 2 screws ①.
3. Remove the DVD Top in the direction of arrow (A).
4. Remove the 4 screws ②.
5. Remove the DVD Deck in the direction of arrow (B).
6. Disconnect the following connectors: **(CP2601, CP2602 and CP2603)**.
7. Remove the 2 screws ③.
8. Remove the DVD PCB in the direction of arrow (C).

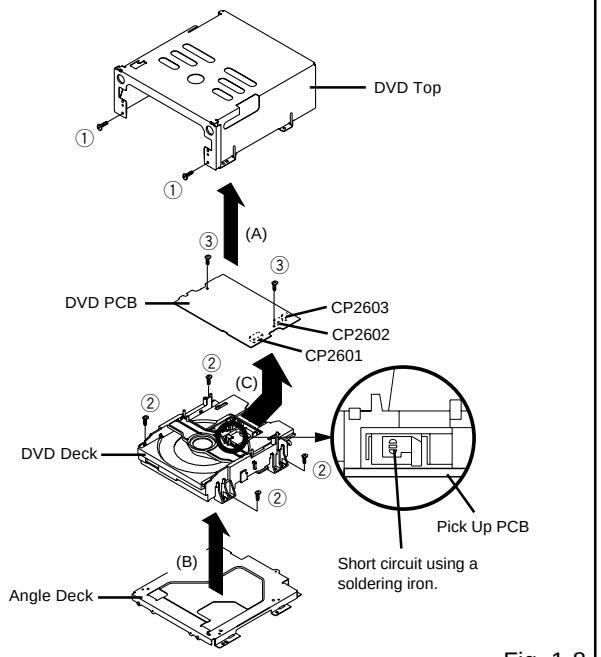

Fig. 1-8

NOTE

1. Before your operation, please read “PREPARATION OF SERVICING”.
2. Use the Lead Free solder.
3. Manual soldering conditions
   - Soldering temperature: 320 ± 20˚C
   - Soldering time: Within 3 seconds
   - Soldering combination: Sn-3.0Ag-0.5Cu
4. When Soldering/Removing of solder, use the drawing equipment over the Pick Up Unit to keep the Flux smoke away from it.
5. When installing the DVD Deck, remove all the soldering on the short circuit position after the connection of Pick Up PCB and DVD PCB connector.

1-9: DEFLECTION PCB (Refer to Fig. 1-9)

1. Remove the 2 screws ①.
2. Remove the 3 screws ②.
3. Remove the Deflection PCB in the direction of arrow.

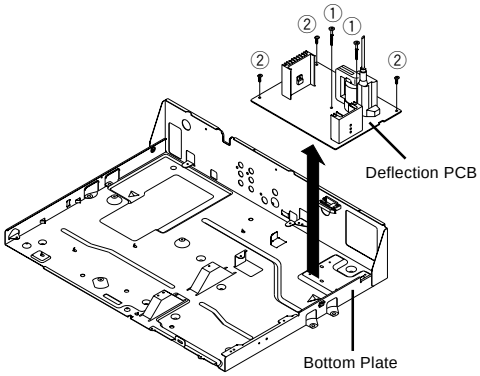

Fig. 1-9

DISASSEMBLY INSTRUCTIONS

2. REMOVAL OF VCR DECK PARTS

2-1: TOP BRACKET (Refer to Fig. 2-1)

1. Extend the 2 supports ①.
2. Slide the 2 supports ② and remove the Top Bracket.

NOTE

1. After the installation of the Top Bracket, bend the support ① so that the Top Bracket is fixed.

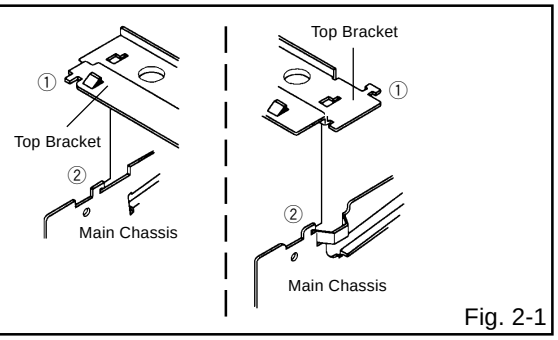

Fig. 2-1

2-2: CASSETTE HOLDER ASS'Y (Refer to Fig. 2-2)

1. Move the Cassette Holder Ass'y to the front side.
2. Push the Locker R to remove the Cassette Side R.
3. Remove the Cassette Side L.

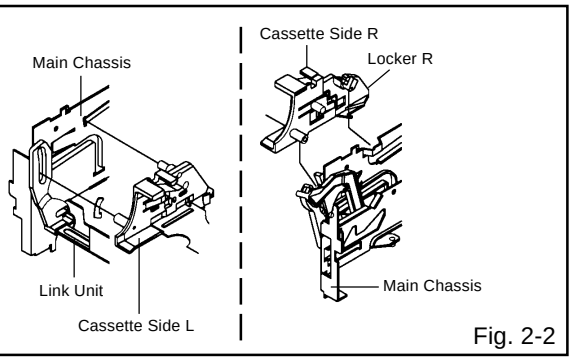

Fig. 2-2

2-3: LINK UNIT (Refer to Fig. 2-3)

1. Set the Link Unit to the Eject position.
2. Unlock the support ①.
3. Remove the (A) side of the Link Unit first, then remove the (B) side.

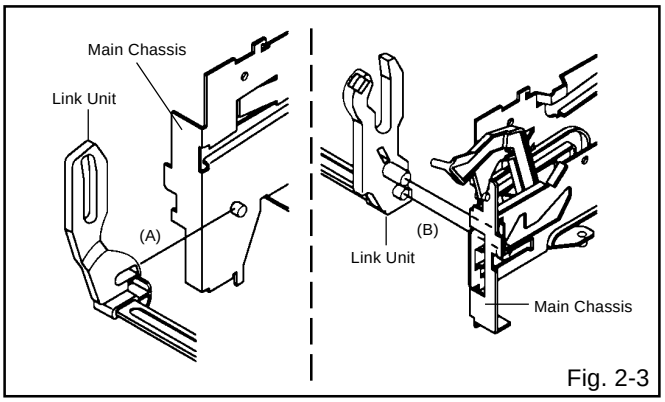

Fig. 2-3

2-4: LINK LEVER/FLAP LEVER/BOT COVER (Refer to Fig. 2-4)

1. Extend the support ①.
2. Remove the Link Lever.
3. Remove the Flap Lever.

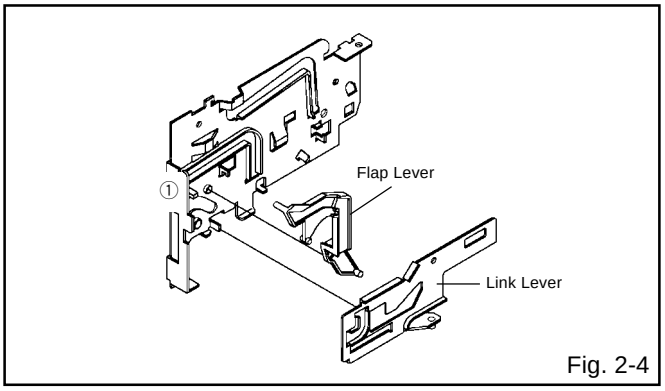

Fig. 2-4

DISASSEMBLY INSTRUCTIONS

2-5: LOADING MOTOR/WORM (Refer to Fig. 2-5-A)

1. Remove the screw ①.
2. Remove the Loading Motor.
3. Remove the Worm.

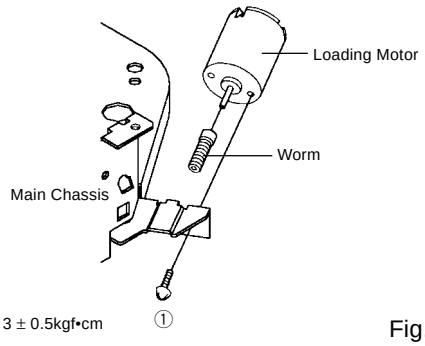

Fig. 2-5-A

NOTE

1. In case of the Worm installation, check if the value of the Fig. 2-5-B is correct.
2. In case of the Loading Motor installation, slacken the wire as shown Fig. 2-5-C.
3. When installing the wires between Capstan DD Unit and Loading Motor, connect them correctly as shown Fig. 2-5-D.

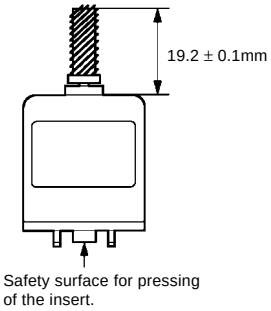

Fig. 2-5-B

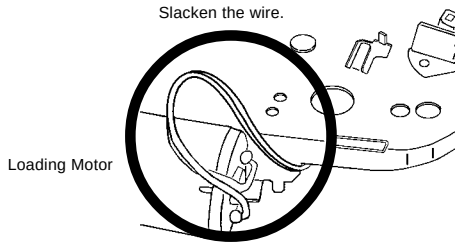

Fig. 2-5-C

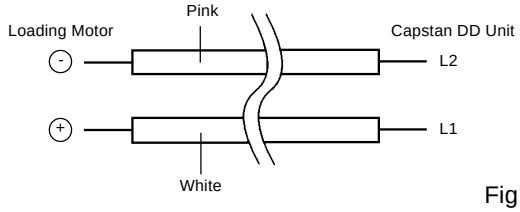

Fig. 2-5-D

2-6: TENSION ASS'Y (Refer to Fig. 2-6-B)

1. Turn the Pinch Roller Cam clockwise so that the Tension Holder hook is set to the position of Fig. 2-6-A to move the Tension Arm Ass'y.
2. Remove the Tension Spring.
3. Unlock the 2 supports ① and remove the Tension Band.
4. Unlock the support ② and remove the Tension Arm Ass'y.
5. Unlock the support ③ and remove the Tension Connect.
6. Float the hook ④ and turn it clockwise then remove the Tension Holder.

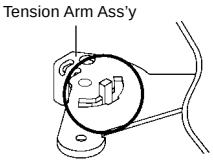

Fig. 2-6-A

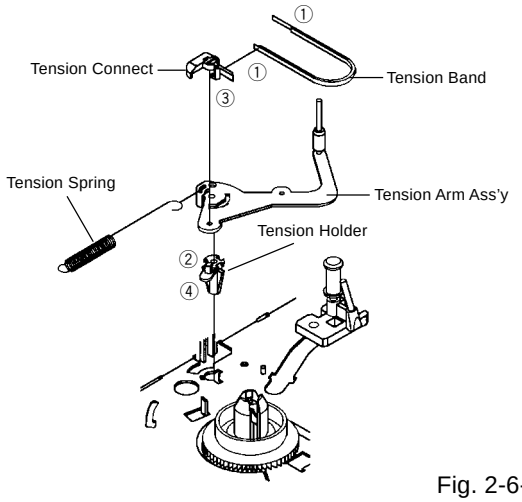

Fig. 2-6-B

NOTE

1. In case of the Tension Band installation, note the direction of the installation. **(Refer to Fig. 2-6-C)**
2. In case of the Tension Band installation, install correctly as Fig. 2-6-D.
3. In case of the Tension Connect installation, install as the circled section of Fig. 2-6-E.

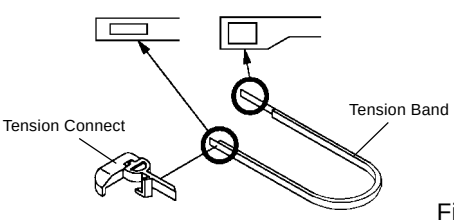

Fig. 2-6-C

DISASSEMBLY INSTRUCTIONS

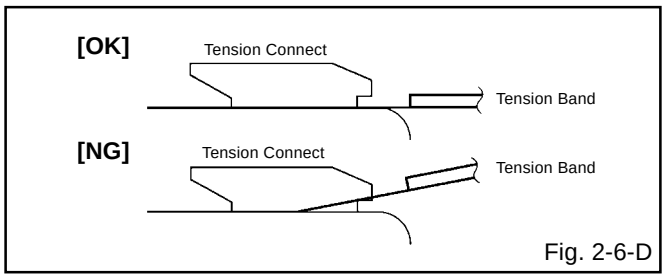

Fig. 2-6-D

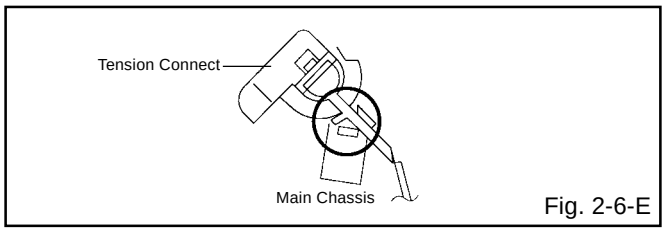

Fig. 2-6-E

2-7: T BRAKE ARM/T BRAKE BAND (Refer to Fig. 2-7-A)

1. Remove the T Brake Spring.
2. Turn the T Brake Arm clockwise and bend the hook section to remove it.
3. Unlock the 2 supports ① and remove the T Brake Band.

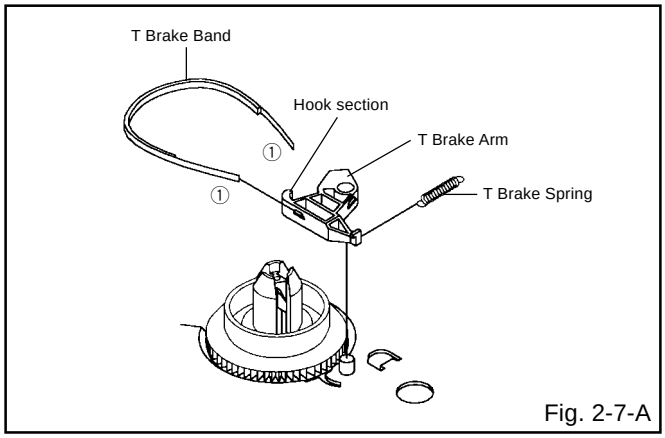

Fig. 2-7-A

NOTE

1. In case of the T Brake Band installation, install correctly as Fig. 2-7-B.

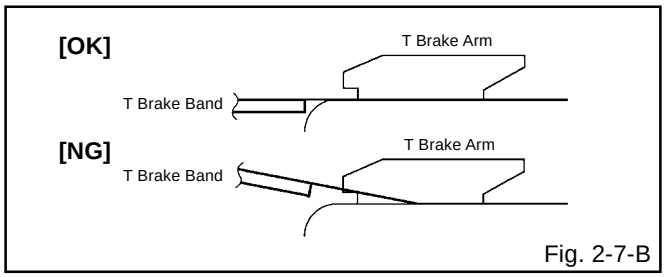

Fig. 2-7-B

2-8: S REEL/T REEL/IDLER ARM ASS'Y/IDLER GEAR (Refer to Fig. 2-8-A)

1. Remove the S Reel and T Reel.
2. Remove the 2 Polyslider Washers ①.
3. Remove the Idler Arm Ass'y and Idler Gear.

NOTE

1. Take care not to damage the gears of the S Reel and T Reel.
2. The Polyslider Washer may be remained on the back of the reel.
3. Take care not to damage the shaft.
4. Do not touch the section "A" of S Reel and T Reel. (Use gloves.) **(Refer to Fig. 2-8-A)** Do not adhere the stains on it.
5. When you install the reel, clean the shaft and grease it. (If you do not grease, noise may be heard in FF/REW mode.)
6. After installing the reel, adjust the height of the reel. **(Refer to MECHANICAL ADJUSTMENT)**

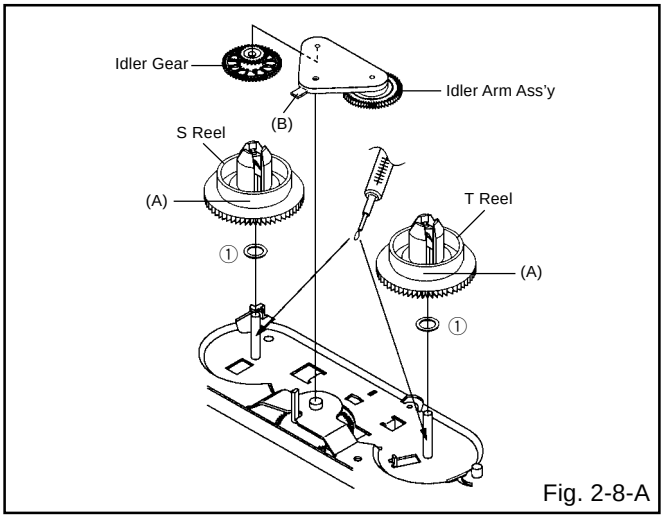

Fig. 2-8-A

NOTE

1. In case of the S Reel and T Reel installation, check if the correct parts are installed. **(Refer to Fig. 2-8-B)**
2. In case of the Idler Arm Ass'y installation, install correctly as Fig. 2-8-C. And also set it so that the section "B" of Fig. 2-8-A is placed under the Main Chassis tab.

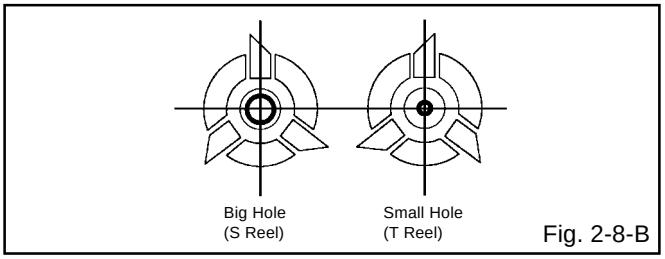

Fig. 2-8-B

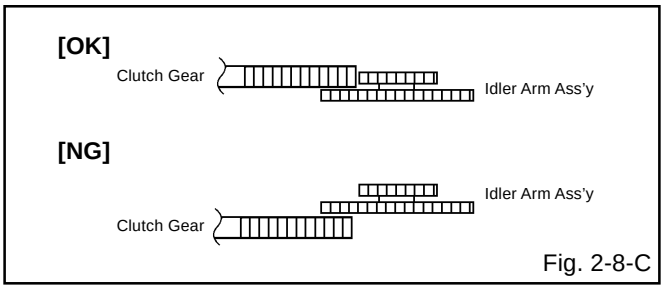

Fig. 2-8-C

DISASSEMBLY INSTRUCTIONS

2-9: CASSETTE OPENER/PINCH ROLLER BLOCK/P5 ARM ASS'Y (Refer to Fig. 2-9-A)

1. Unlock the support ① and remove the Cassette Opener.
2. Remove the Pinch Roller Block and P5 Arm Ass'y.

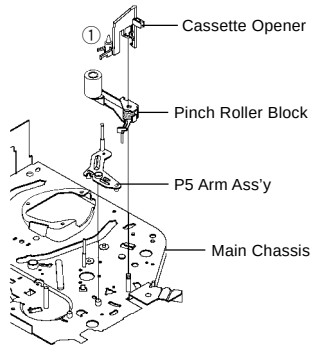

Fig. 2-9-A

NOTE

1. Do not touch the Pinch Roller. (Use gloves.)
2. In case of the Pinch Roller Block and the Pinch Roller Cam installation, install correctly as Fig. 2-9-B.

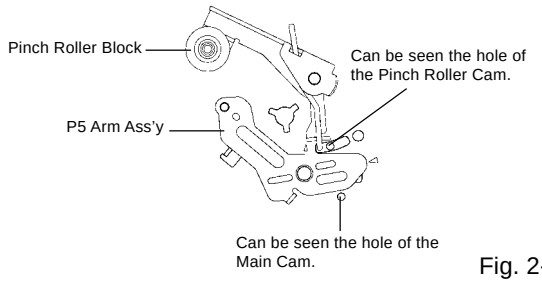

Fig. 2-9-B

2-10: A/C HEAD (Refer to Fig. 2-10-A)

1. Remove the screw ①.
2. Remove the A/C Head Base.
3. Remove the 3 screws ②.
4. Remove the A/C Head and A/C Head Spring.

NOTE

1. Do not touch the A/C Head. (Use gloves.)
2. When you install the A/C Head Spring, install as shown in Fig. 2-10-B.
3. When you install the A/C Head, tighten the screw (1) first, then tighten the screw (2), finally tighten the screw (3).

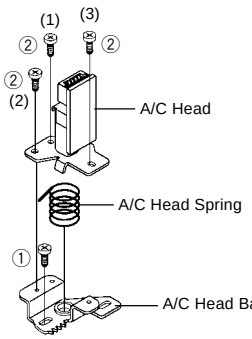

• Screw Torque: 5 ± 0.5kgf•cm (Screw ①)

Fig. 2-10-A

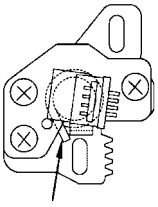

Fig. 2-10-B

2-11: FE HEAD (RECORDER ONLY) (Refer to Fig. 2-11)

1. Remove the screw ①.
2. Remove the FE Head.

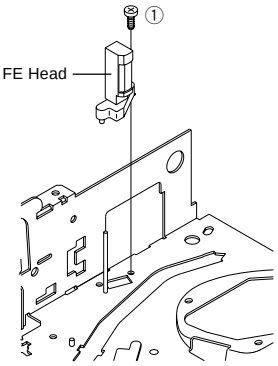

• Screw Torque: 5 ± 0.5kgf•cm
• The FE Head is not installed on the Video Cassette Player.

Fig. 2-11

2-12: CYLINDER UNIT ASS'Y (Refer to Fig. 2-12)

1. Unlock the support ① and remove the AHC Ass'y.
2. Disconnect the following connector: **(CD2001)**.
3. Remove the 3 screws ②.
4. Remove the Cylinder Unit Ass'y.

NOTE

1. When you install the Cylinder Unit Ass'y, tighten the screws from (1) to (3) in order while pulling the Ass'y toward the left front direction.

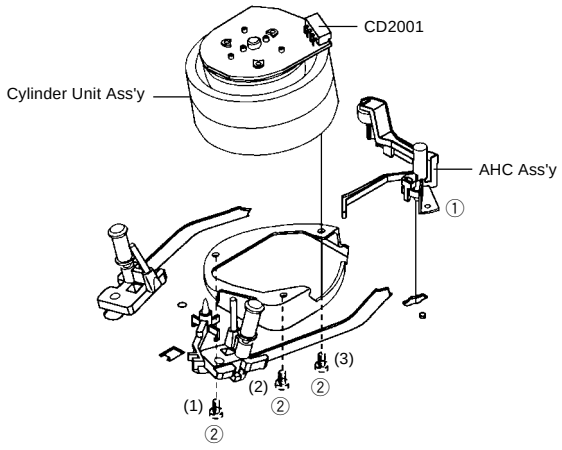

• Screw Torque: 3 ± 0.5kgf•cm

Fig. 2-12

DISASSEMBLY INSTRUCTIONS

2-13: CAPSTAN DD UNIT (Refer to Fig. 2-13)

1. Remove the Capstan Belt.
2. Remove the screw ①.
3. Remove the Capstan Holder.
4. Remove the 3 screws ②.
5. Remove the Capstan DD Unit.

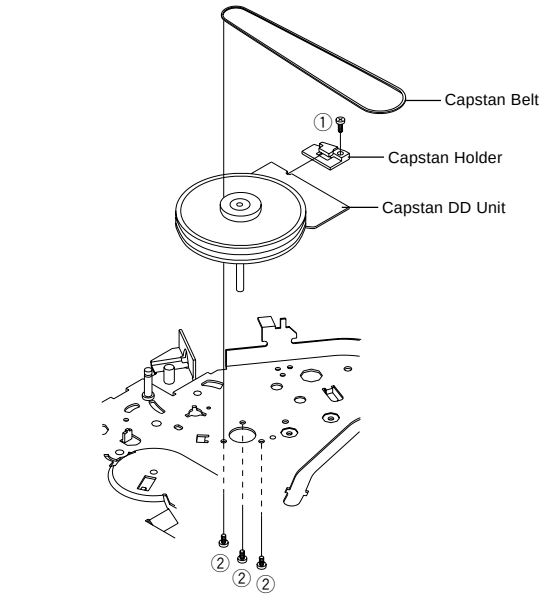

• Screw Torque: 4 ± 0.5kgf•cm

Fig. 2-13

2-14: MAIN CAM/PINCH ROLLER CAM/JOINT GEAR (Refer to Fig. 2-14-A)

1. Remove the E-Ring ①, then remove the Main Cam.
2. Remove the E-Ring ②, then remove the Pinch Roller Cam and Joint Gear.

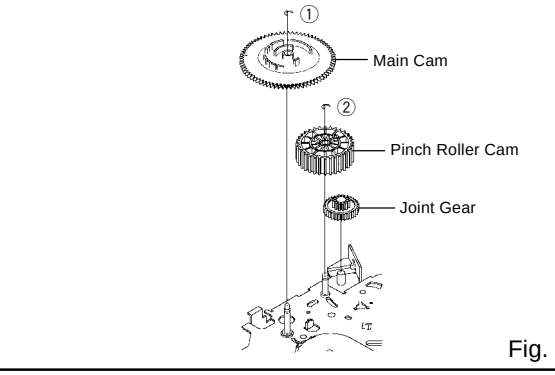

Fig. 2-14-A

NOTE

1. In case of the Pinch Roller Cam and Main Cam installation, install them as the circled section of Fig. 2-14-B so that the each markers are met. **(Refer to Fig. 2-14-B)** And also can be seen the Main Chassis hole through the Main Cam maker hole.

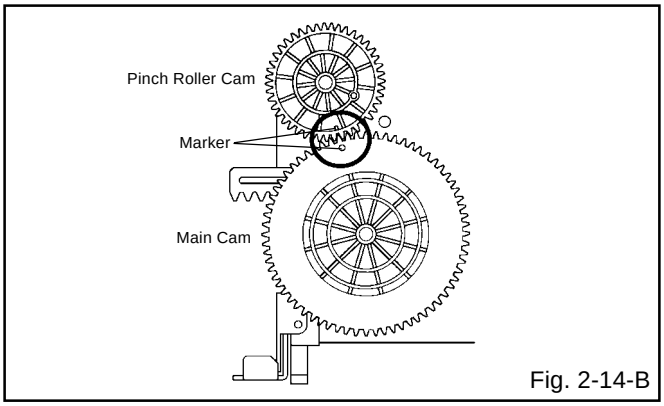

Fig. 2-14-B

2-15: LOADING GEAR S/T UNIT (Refer to Fig. 2-15-A)

1. Remove the E-Ring ① and remove the Main Loading Gear.
2. Remove the Main Rod, Tension Lever, Loading Arm S Unit and Loading Arm T Unit.

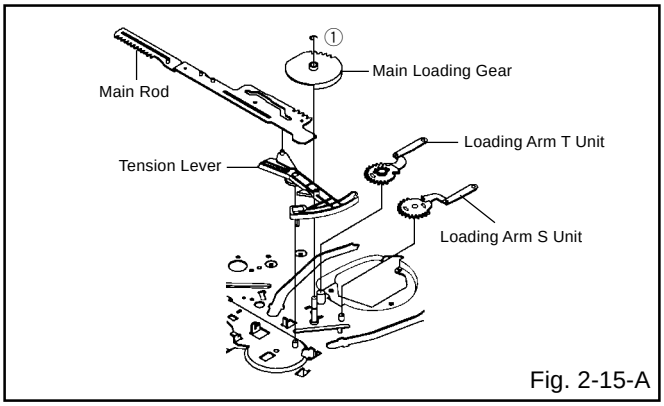

Fig. 2-15-A

DISASSEMBLY INSTRUCTIONS

NOTE

1. When you install the Loading Arm S Unit, Loading Arm T Unit and Main Loading Gear, align each marker. **(Refer to Fig. 2-15-B)**

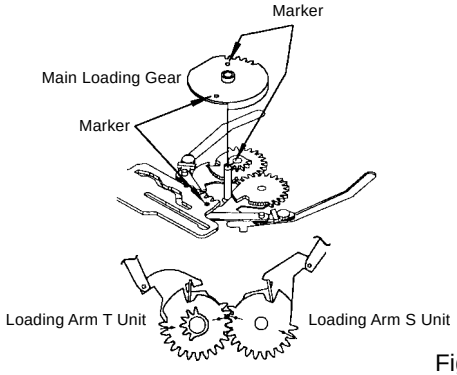

Fig. 2-15-B

2-16: CLUTCH ASS'Y/RING SPRING/CLUTCH LEVER/ CLUTCH GEAR (Refer to Fig. 2-16-A)

1. Remove the Polyslider Washer ①.
2. Remove the Clutch Ass'y and Ring Spring.
3. Remove the Clutch Lever.
4. Remove the Coupling Gear, Coupling Spring and Clutch Gear.

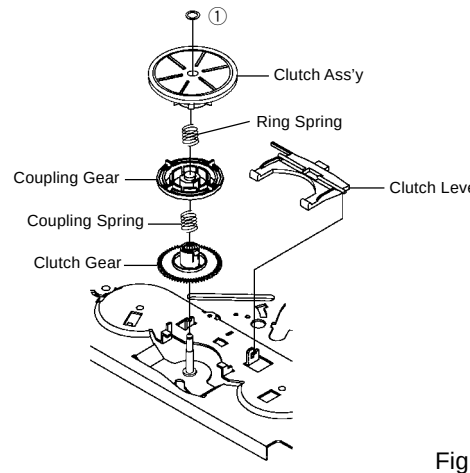

Fig. 2-16-A

NOTE

1. In case of the Clutch Ass'y installation, install it with inserting the spring of the Clutch Ass'y into the dent of the Coupling Gear. **(Refer to Fig. 2-16-B)**

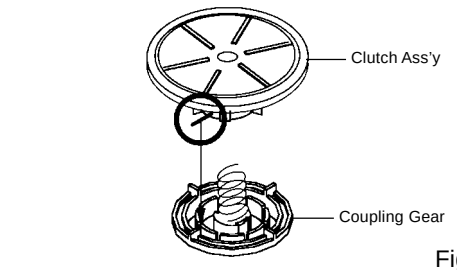

Fig. 2-16-B

2-17: CASSETTE GUIDE POST/INCLINED BASE S/T UNIT/P4 CAP/LED REFLECTOR (Refer to Fig. 2-17-A)

1. Remove the P4 Cap.
2. Unlock the support ① and remove the Cassette Guide Post.
3. Remove the Inclined Base S/T Unit.
4. Remove the screw ②.
5. Remove the LED Reflector.

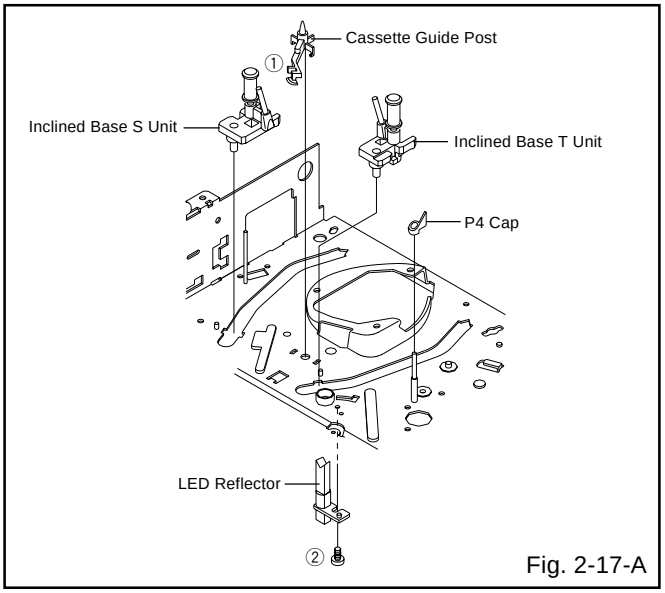

Fig. 2-17-A

NOTE

1. Do not touch the roller of Guide Roller.
2. In case of the P4 Cap installation, install it with parallel for "A" and "B" of Fig. 2-17-B.
3. In case of the Cassette Guide Post installation, install correctly as the circled section of Fig. 2-17-C.

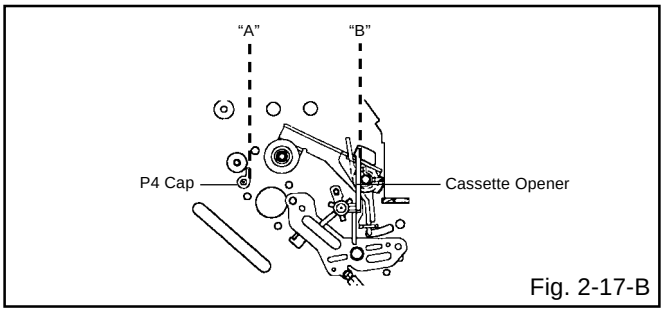

Fig. 2-17-B

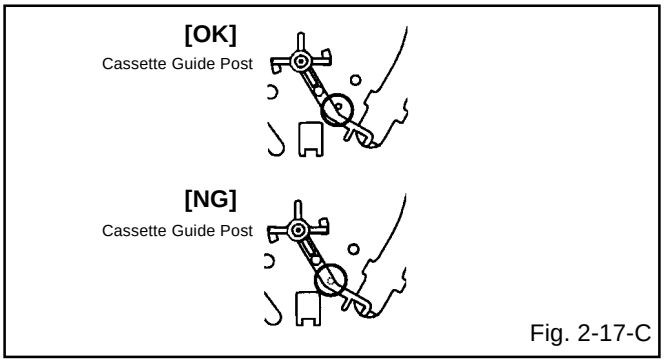

Fig. 2-17-C

DISASSEMBLY INSTRUCTIONS

3. REMOVAL OF DVD DECK PARTS

NOTE

1. Disassemble only the DVD DECK PARTS parts listed here. Minute adjustments are needed if the disassembly is done. If the repair is needed except listed parts, replace the DVD MECHA ASS'Y.

3-1: TRAY (Refer to Fig. 3-1-A)

1. Set the Tray opened. **(Refer to the DISC REMOVAL METHOD AT NO POWER SUPPLY)**
2. Unlock the 2 supports ① and remove the Tray.

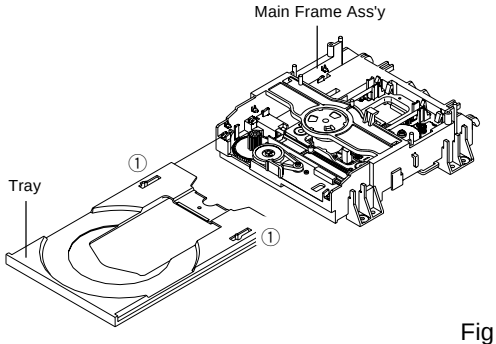

Fig. 3-1-A

NOTE

1. In case of the Tray installation, install them as the circled section of Fig. 3-1-B so that the each markers are met.

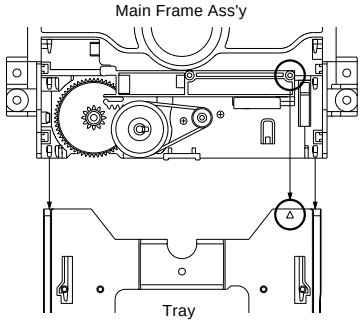

Fig. 3-1-B

3-2: MAIN CHASSIS ASS'Y (Refer to Fig. 3-2-A)

1. Remove the screw ①.
2. Unlock the 2 supports ②.
3. Remove the Insulator (R) from the Main Frame Ass'y.
4. Remove the Main Chassis Ass'y.

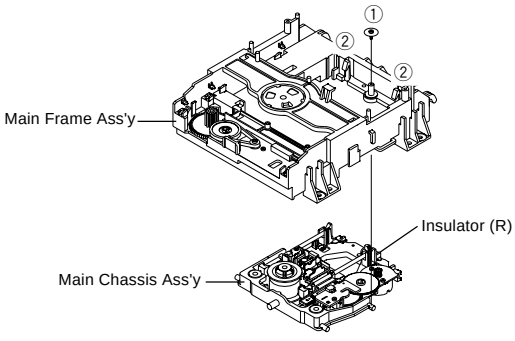

Fig. 3-2-A

NOTE

1. In case of the Main Chassis Ass'y, install it from (1) to (4) in order. **(Refer to Fig. 3-2-B)**
2. In case of the Main Chassis Ass'y installation, hook the wire on the Main Frame Ass'y as shown Fig. 3-2-C.

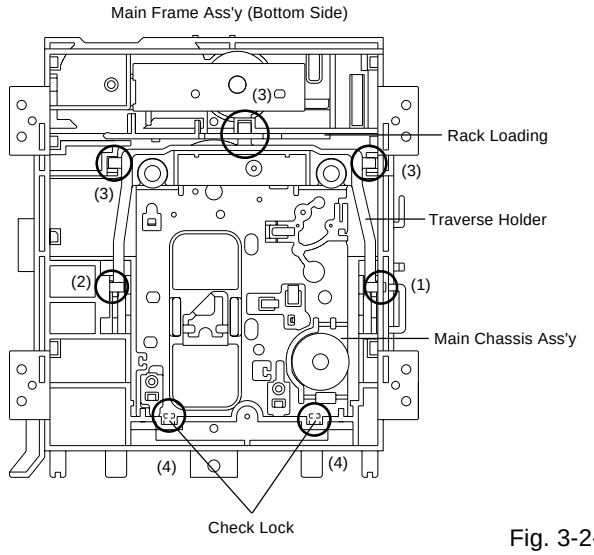

Fig. 3-2-B

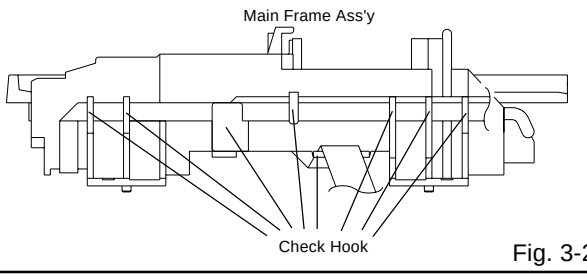

Fig. 3-2-C

DISASSEMBLY INSTRUCTIONS

3-3: LOADING MOTOR PCB ASS'Y/ LOADING BELT (Refer to Fig. 3-3-A)

1. Remove the Loading Belt.
2. Remove the screw ①.
3. Remove the 2 screws ②.
4. Remove the Loading Motor PCB Ass'y.
5. Remove the Pulley Gear.

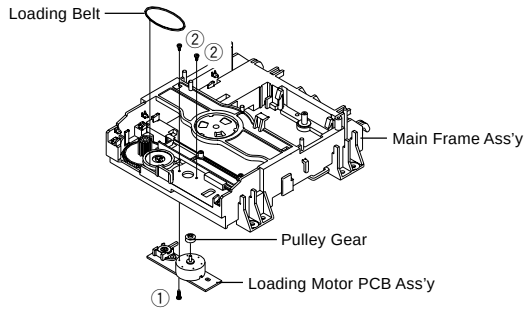

• Screw Torque: 2.5 ± 0.3kgf•cm (Screw ①)
• Screw Torque: 1.0 ± 0.3kgf•cm (Screw ②)

Fig. 3-3-A

NOTE

1. In case of the Pulley Motor installation, check if the value of the Fig. 3-3-B is correct.
2. When installing the Loading Motor PCB Ass'y, install it correctly as Fig. 3-3-C.
3. In case of the Loading Motor PCB Ass'y installation, hook the wire on the Main Frame Ass'y as shown Fig. 3-3-C.

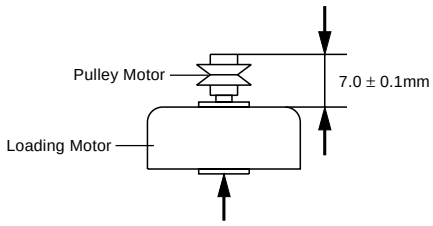

Fig. 3-3-B

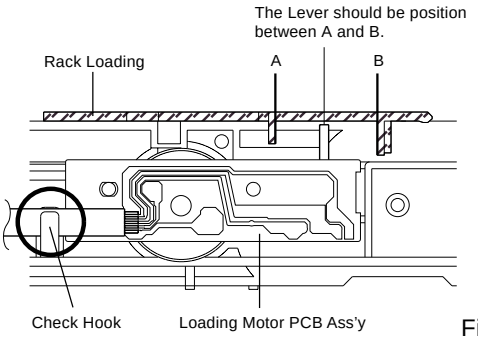

Fig. 3-3-C

3-4: RACK LOADING/MAIN GEAR/PULLEY GEAR (Refer to Fig. 3-4-A)

1. Press down the catcher ① and slide the Rack Loading.
2. Unlock the support ② and remove the Pulley Gear.
3. Remove the Main Gear.

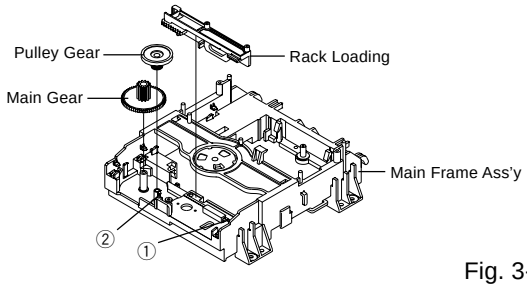

Fig. 3-4-A

NOTE

1. In case of the Rack Loading installation, do not mesh it to the Main Gear as shown the Fig. 3-4-B.

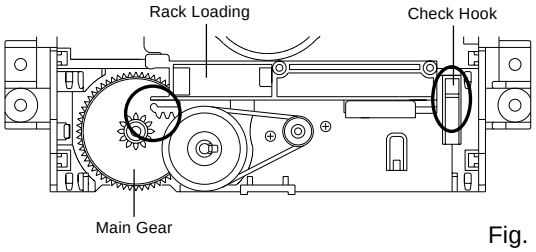

Fig. 3-4-B

3-5: CLAMPER ASS'Y (Refer to Fig. 3-5-A)

1. Press the Clamper and rotate the Clamper Plate clockwise, then unlock the 3 supports ①.
2. Remove the Clamper Plate, Clamper Magnet and Clamper.

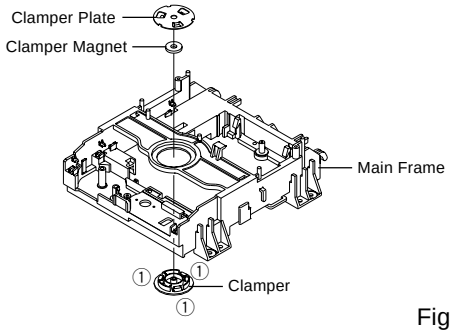

Fig. 3-5-A

DISASSEMBLY INSTRUCTIONS

NOTE

1. In case of the Clamper Ass'y installation, install correctly as Fig. 3-5-B.

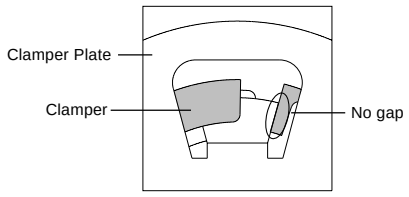

Fig. 3-5-B

3-6: TRAVERSE HOLDER/INSULATOR (F)/INSULATOR (R) (Refer to Fig. 3-6-A)

1. Remove the Traverse Holder.
2. Remove the 2 Insulator (F).
3. Remove the Insulator (R).

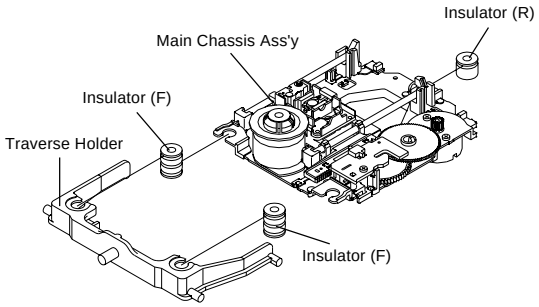

Fig. 3-6-A

NOTE

1. In case of the Insulator (F) installation, install correctly as Fig. 3-6-B.
2. In case of the Insulator (R) installation, install correctly as Fig. 3-6-C.

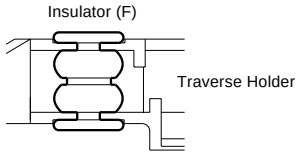

Fig. 3-6-B

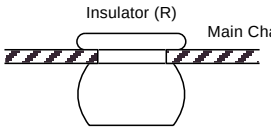

Fig. 3-6-C

3-7: SWITCH PCB ASS'Y/MIDDLE GEAR/FEED MOTOR (Refer to Fig. 3-7-A)

1. Remove the screw ①.
2. Remove the Switch PCB Ass'y.
3. Unlock the support ②.
4. Remove the Middle Gear.
5. Remove the 2 screws ③.
6. Remove the Feed Motor.
7. Remove the Motor Gear.

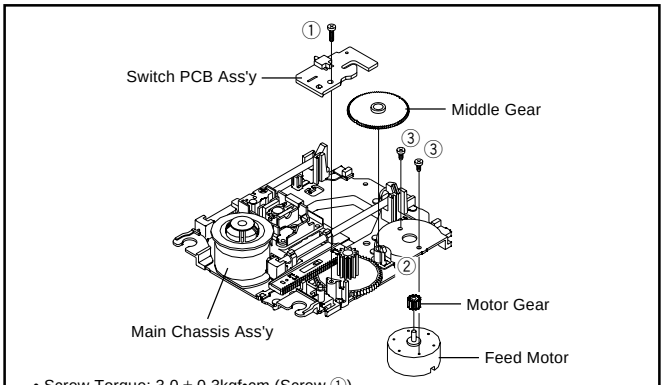

Fig. 3-7-A

NOTE

1. In case of the Motor Gear installation, check if the value of the Fig. 3-7-B is correct.
2. When installing the wire of the Switch PCB Ass'y, install it correctly as Fig. 3-7-C.
3. After the assembly of the Main Chassis Ass'y, hook the wire on the Main Chassis Ass'y as shown Fig. 3-7-D.

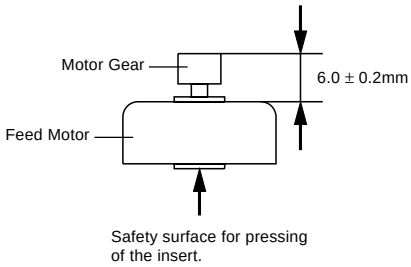

Fig. 3-7-B

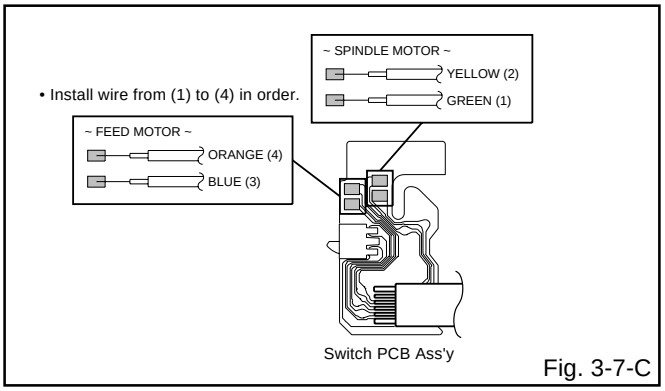

Fig. 3-7-C

DISASSEMBLY INSTRUCTIONS

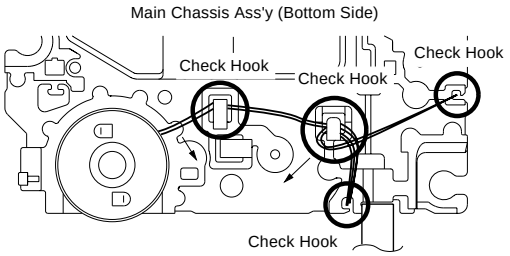

• Loosen the wire in the direction of the arrow.

Fig. 3-7-D

3-8: FFC WIRE HANDLING

1. When installing the FFC, fold it correctly and install it as shown from Fig. 3-8-A to Fig. 3-8-C.

NOTE

1. Do not make the folding lines except the specified positions for the FFC.

[24 pin FFC]

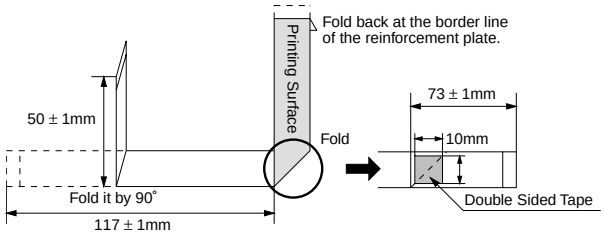

Fig. 3-8-A

[5 pin FFC]

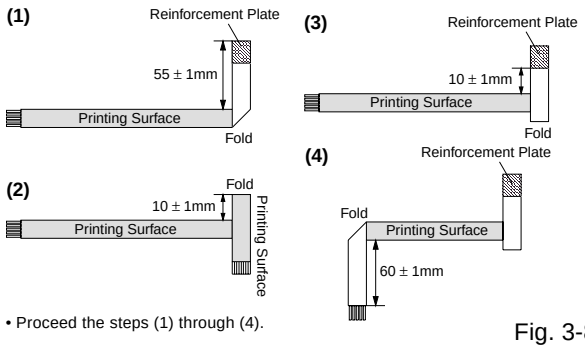

• Proceed the steps (1) through (4).

Fig. 3-8-B

[6 pin FFC]

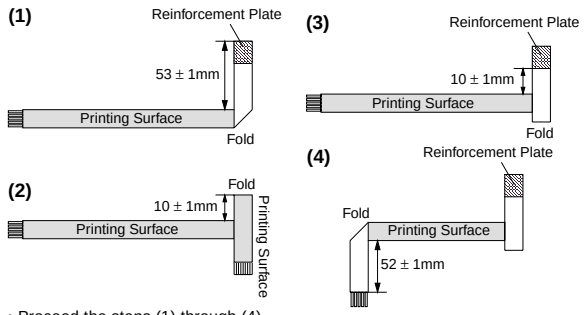

• Proceed the steps (1) through (4).

Fig. 3-8-C

DISASSEMBLY INSTRUCTIONS

4. REMOVAL OF ANODE CAP

Read the following **NOTED** items before starting work.

* After turning the power off there might still be a potential voltage that is very dangerous. When removing the Anode Cap, make sure to discharge the Anode Cap's potential voltage.
* Do not use pliers to loosen or tighten the Anode Cap terminal, this may cause the spring to be damaged.

REMOVAL

1. Follow the steps as follows to discharge the Anode Cap. **(Refer to Fig. 4-1.)**
   Connect one end of an Alligator Clip to the metal part of a flat-blade screwdriver and the other end to ground.
   While holding the plastic part of the insulated Screwdriver, touch the support of the Anode with the tip of the Screwdriver.
   A cracking noise will be heard as the voltage is discharged.

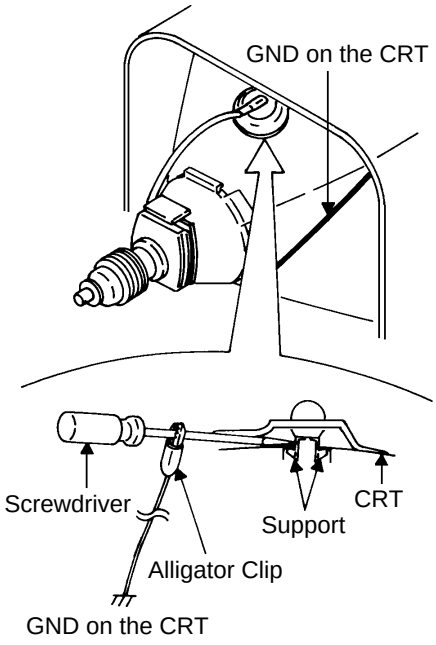

Fig. 4-1

2. Flip up the sides of the Rubber Cap in the direction of the arrow and remove one side of the support. **(Refer to Fig. 4-2.)**

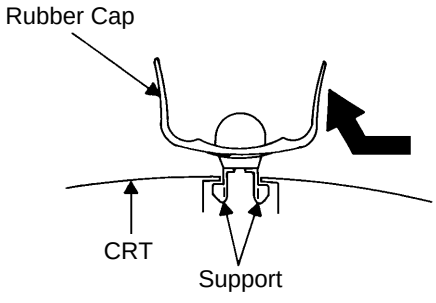

Fig. 4-2

3. After one side is removed, pull in the opposite direction to remove the other.

NOTE

Take care not to damage the Rubber Cap.

INSTALLATION

1. Clean the spot where the cap was located with a small amount of alcohol. **(Refer to Fig. 4-3.)**

NOTE

Confirm that there is no dirt, dust, etc. at the spot where the cap was located.

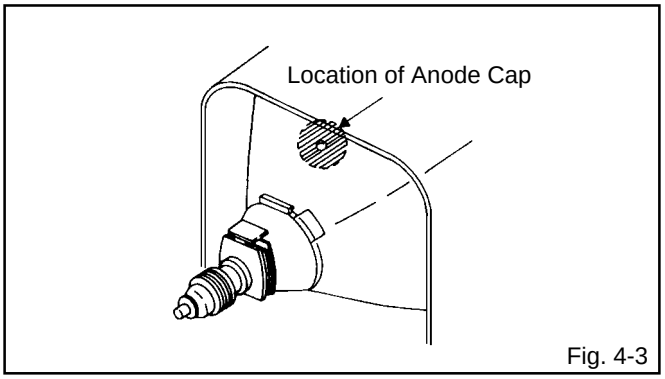

Fig. 4-3

2. Arrange the wire of the Anode Cap and make sure the wire is not twisted.
3. Turn over the Rubber Cap. **(Refer to Fig. 4-4.)**

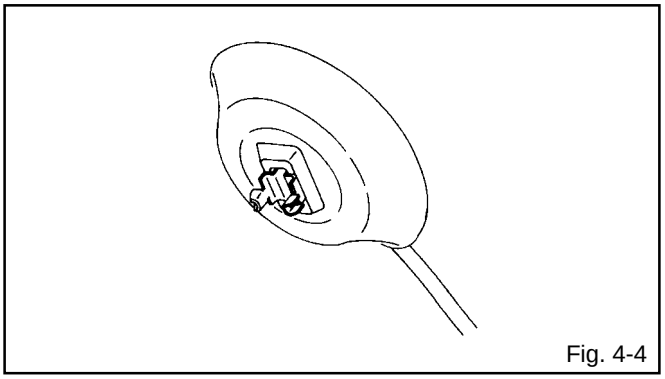
Fig. 4-4

4. Insert one end of the Anode Support into the anode button, then the other as shown in **Fig. 4-5**.

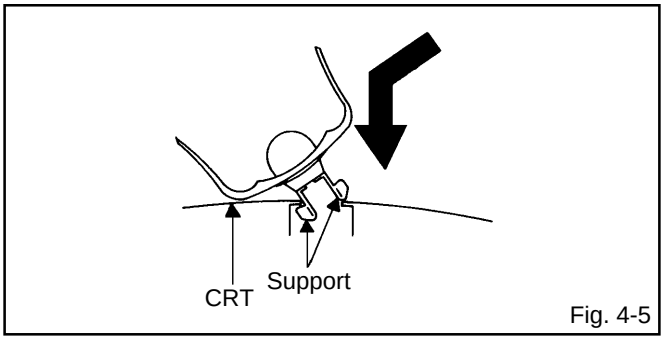

Fig. 4-5

5. Confirm that the Support is securely connected.
6. Put on the Rubber Cap without moving any parts.

DISASSEMBLY INSTRUCTIONS

5. REMOVAL AND INSTALLATION OF FLAT PACKAGE IC

REMOVAL

1. Put Masking Tape (cotton tape) around the Flat Package IC to protect other parts from any damage. **(Refer to Fig. 5-1.)**

   NOTE

   Masking is carried out on all the parts located within 10 mm distance from IC leads.

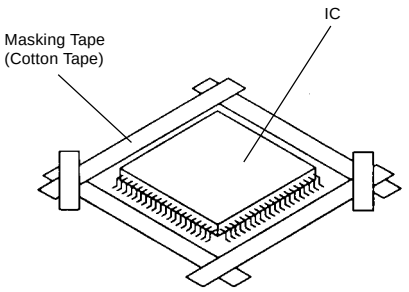

Fig. 5-1

2. Heat the IC leads using a blower type IC desoldering machine. **(Refer to Fig. 5-2.)**

   NOTE

   Do not rotate or move the IC back and forth , until IC can move back and forth easily after desoldering the leads completely.

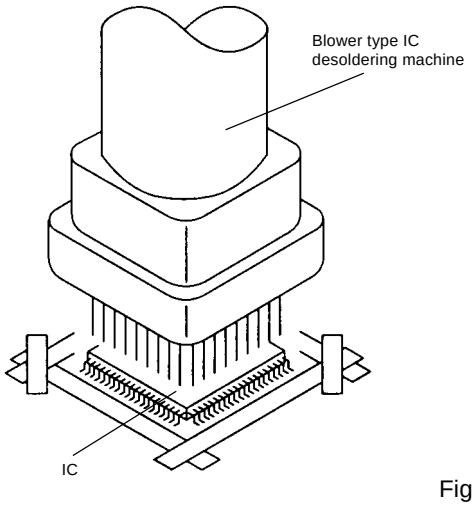

Fig. 5-2

3. When IC starts moving back and forth easily after desoldering completely, pickup the corner of the IC using a tweezers and remove the IC by moving with the IC desoldering machine. **(Refer to Fig. 5-3.)**

   NOTE

   Some ICs on the PCB are affixed with glue, so be careful not to break or damage the foil of each IC leads or solder lands under the IC when removing it.

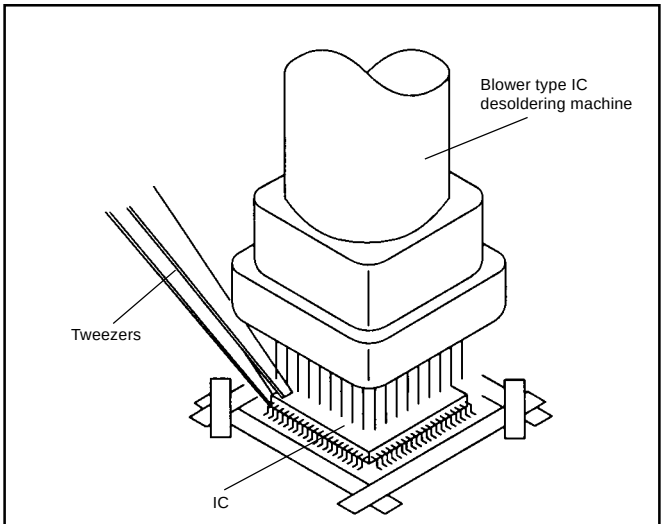

Fig. 5-3

4. Peel off the Masking Tape.
5. Absorb the solder left on the pattern using the Braided Shield Wire. **(Refer to Fig. 5-4.)**

   NOTE

   Do not move the Braided Shield Wire in the vertical direction towards the IC pattern.

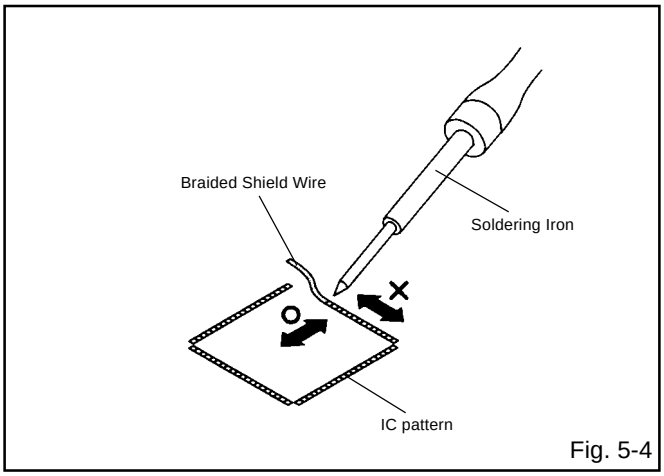

Fig. 5-4

DISASSEMBLY INSTRUCTIONS

INSTALLATION

1. Take care of the polarity of new IC and then install the new IC fitting on the printed circuit pattern. Then solder each lead on the diagonal positions of IC temporarily. **(Refer to Fig. 5-5.)**

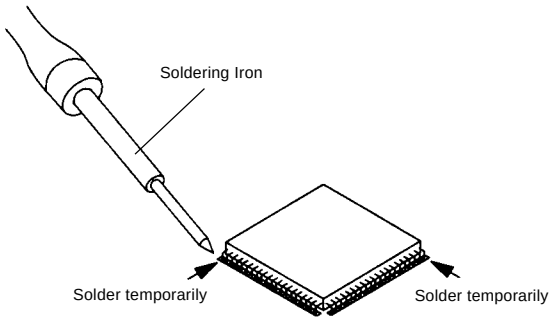

Fig. 5-5

2. Supply the solder from the upper position of IC leads sliding to the lower position of the IC leads. **(Refer to Fig. 5-6.)**

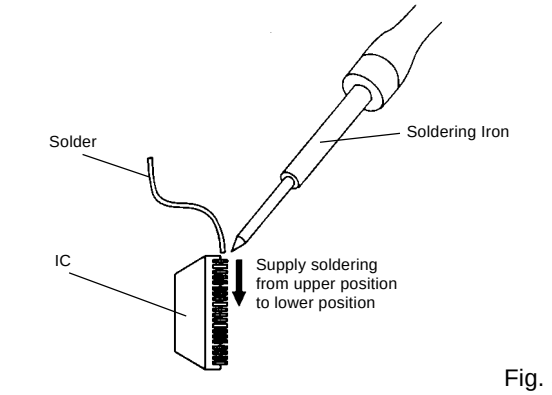

Fig. 5-6

3. Absorb the solder left on the lead using the Braided Shield Wire. **(Refer to Fig. 5-7.)**

   NOTE

   Do not absorb the solder to excess.

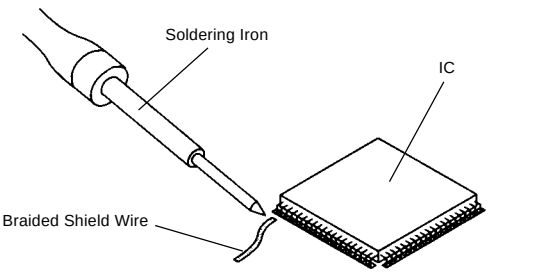

Fig. 5-7

4. When bridge-soldering between terminals and/or the soldering amount are not enough, resolder using a Thin-tip Soldering Iron. **(Refer to Fig. 5-8.)**

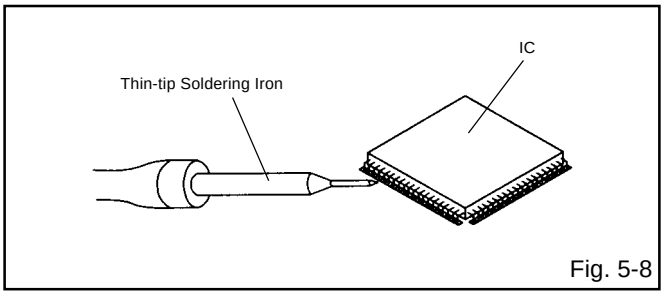

Fig. 5-8

5. Finally, confirm the soldering status on four sides of the IC using a magnifying glass.
   Confirm that no abnormality is found on the soldering position and installation position of the parts around the IC. If some abnormality is found, correct by resoldering.

   NOTE

   When the IC leads are bent during soldering and/or repairing, do not repair the bending of leads. If the bending of leads are repaired, the pattern may be damaged. So, always be sure to replace the IC in this case.

KEY TO ABBREVIATIONS

A	**A/C**	:	Audio/Control
	ACC	:	Automatic Color Control
	AE	:	Audio Erase
	AFC	:	Automatic Frequency Control
	AFT	:	Automatic Fine Tuning
	AFT DET	:	Automatic Fine Tuning Detect
	AGC	:	Automatic Gain Control
	AMP	:	Amplifier
	ANT	:	Antenna
	A.PB	:	Audio Playback
	APC	:	Automatic Phase Control
	ASS'Y	:	Assembly
	AT	:	All Time
	AUTO	:	Automatic
	A/V	:	Audio/Video
B	**BGP**	:	Burst Gate Pulse
	BOT	:	Beginning of Tape
	BPF	:	Bandpass Filter
	BRAKE SOL	:	Brake Solenoid
	BUFF	:	Buffer
	B/W	:	Black and White
C	**C**	:	Capacitance, Collector
	CASE	:	Cassette
	CAP	:	Capstan
	CARR	:	Carrier
	CH	:	Channel
	CLK	:	Clock
	CLOCK (SY-SE)	:	Clock (Syscon to Servo)
	COMB	:	Combination, Comb Filter
	CONV	:	Converter
	CPM	:	Capstan Motor
	CTL	:	Control
	CYL	:	Cylinder
	CYL-M	:	Cylinder-Motor
	CYL SENS	:	Cylinder-Sensor
D	**DATA (SY-CE)**	:	Data (Syscon to Servo)
	dB	:	Decibel
	DC	:	Direct Current
	DD Unit	:	Direct Drive Motor Unit
	DEMOD	:	Demodulator
	DET	:	Detector
	DEV	:	Deviation
E	**E**	:	Emitter
	EF	:	Emitter Follower
	EMPH	:	Emphasis
	ENC	:	Encoder
	ENV	:	Envelope
	EOT	:	End of Tape
	EQ	:	Equalizer
	EXT	:	External
F	**F**	:	Fuse
	FBC	:	Feed Back Clamp
	FE	:	Full Erase
	FF	:	Fast Forward, Flip-flop
	FG	:	Frequency Generator
	FL SW	:	Front Loading Switch
	FM	:	Frequency Modulation
	FSC	:	Frequency Sub Carrier
	FWD	:	Forward
G	**GEN**	:	Generator
	GND	:	Ground
H	**H.P.F**	:	High Pass Filter
	H.SW	:	Head Switch
	Hz	:	Hertz
I	**IC**	:	Integrated Circuit
	IF	:	Intermediate Frequency
	IND	:	Indicator
	INV	:	Inverter
K	**KIL**	:	Killer
L	**L**	:	Left
	LED	:	Light Emitting Diode
	LIMIT AMP	:	Limiter Amplifier
	LM, LDM	:	Loading Motor
	LP	:	Long Play
	L.P.F	:	Low Pass Filter
	LUMI.	:	Luminance
M	**M**	:	Motor
	MAX	:	Maximum
	MINI	:	Minimum
	MIX	:	Mixer, mixing
	MM	:	Monostable Multivibrator
	MOD	:	Modulator, Modulation
	MPX	:	Multiplexer, Multiplex
	MS SW	:	Mecha State Switch
N	**NC**	:	Non Connection
	NR	:	Noise Reduction
O	**OSC**	:	Oscillator
	OPE	:	Operation
P	**PB**	:	Playback
	PB CTL	:	Playback Control
	PB-C	:	Playback-Chrominance
	PB-Y	:	Playback-Luminance
	PCB	:	Printed Circuit Board
	P. CON	:	Power Control
	PD	:	Phase Detector
	PG	:	Pulse Generator
	P-P	:	Peak-to Peak
R	**R**	:	Right
	REC	:	Recording
	REC-C	:	Recording-Chrominance
	REC-Y	:	Recording-Luminance
	REEL BRK	:	Reel Brake
	REEL S	:	Reel Sensor
	REF	:	Reference
	REG	:	Regulated, Regulator
	REW	:	Rewind
	REV, RVS	:	Reverse
	RF	:	Radio Frequency
	RMC	:	Remote Control
	RY	:	Relay
S	**S. CLK**	:	Serial Clock
	S. COM	:	Sensor Common
	S. DATA	:	Serial Data
	SEG	:	Segment
	SEL	:	Select, Selector
	SENS	:	Sensor
	SER	:	Search Mode
	SI	:	Serial Input
	SIF	:	Sound Intermediate Frequency
	SO	:	Serial Output
	SOL	:	Solenoid
	SP	:	Standard Play

KEY TO ABBREVIATIONS

S	**STB**	:	Serial Strobe
	SW	:	Switch
	SYNC	:	Synchronization
	SYNC SEP	:	Sync Separator, Separation
T	**TR**	:	Transistor
	TRAC	:	Tracking
	TRICK PB	:	Trick Playback
	TP	:	Test Point
U	**UNREG**	:	Unregulated
V	**V**	:	Volt
	VCO	:	Voltage Controlled Oscillator
	VIF	:	Video Intermediate Frequency
	VP	:	Vertical Pulse, Voltage Display
	V.PB	:	Video Playback
	VR	:	Variable Resistor
	V.REC	:	Video Recording
	VSF	:	Visual Search Fast Forward
	VSR	:	Visual Search Rewind
	VSS	:	Voltage Super Source
	V-SYNC	:	Vertical-Synchronization
	VT	:	Voltage Tuning
X	**X'TAL**	:	Crystal
Y	**Y/C**	:	Luminance/Chrominance

SERVICE MODE LIST

This unit is provided with the following SERVICE MODES so you can repair, examine and adjust easily.
To enter to the SERVICE MODE function, press and hold both buttons simultaneously on the main unit or on the main unit and on the remote control for more than the standard time (second).

Set Condition	Set Key	Remocon Key	Standard Time	Operations
TV mode	VOL. (-) MIN	0	2	Releasing of V-CHIP PASSWORD.
TV mode	VOL. (-) MIN	1	2	Initialization of factory data. NOTE: Do not use this for data normal servicing. If you set factory initialization, the memories are reset such as the clock setting, the channel setting, the POWER ON total hours, and PLAY/REC total hours.
VCR mode (Playback)	VOL. (-) MIN	3	2	Adjust the PG SHIFTER automatically. Refer to the "ELECTRICAL ADJUSTMENT" (PG SHIFTER).
VCR mode (Playback)	VOL. (-) MIN	4	2	Adjust the PG SHIFTER manually. Refer to the "ELECTRICAL ADJUSTMENT" (PG SHIFTER).
VCR mode (Playback)	VOL. (-) MIN	5	2	Adjusting of the Tracking to the center position.
TV mode	VOL. (-) MIN	6	2	POWER ON total hours and PLAY/REC total hours are displayed on the screen. Refer to the "PREVENTIVE CHECKS AND SERVICE INTERVALS" (CONFIRMATION OF HOURS USED). Can be checked of the INITIAL DATA of MEMORY IC. Refer to the "WHEN REPLACING EEPROM (MEMORY) IC".
ALL mode	VOL. (-) MIN	9	2	Display of the Adjustment MENU on the screen. Refer to the "ELECTRICAL ADJUSTMENT" (On-Screen Display Adjustment).
DVD mode (No disc)	REC/OTR	4	2	Initialization of factory on DVD data. NOTE: Do not use this for normal servicing. The function will only work without the setting of DVD disc at DVD mode.
DVD mode (No disc)	STOP (DVD)	7	3	Releasing of PARENTAL LOCK. Refer to the “PARENTAL CONTROL - RATING LEVEL”. NOTE: The function will only work without the setting of DVD disc at DVD mode.
DVD mode (Stop)	STOP (DVD)	9	3	Tray cannot be opened. Refer to the “TRAY LOCK”. NOTE: No indications on the screen when the Tray Lock is setting.

Set Condition	Set Key	Remocon Key	Standard Time	Operations
ALL mode	VOL. (-) MIN	FF	2	The BOT, EOT, and the Reel Sensor do not work and the VCR deck can be operated without a cassette tape. Refer to the "PREPARATION FOR SERVICING"

PREVENTIVE CHECKS AND SERVICE INTERVALS

The following standard table depends on environmental conditions and usage.
Parts replacing time does not mean the life span for individual parts.
Also, long term storage or misuse may cause transformation and aging of rubber parts.
The following list means standard hours, so the checking hours depends on the conditions.

Time / Parts Name	500 hours	1,000 hours	1,500 hours	2,000 hours	2,500 hours	Notes
Audio Control Head	■	■	■	●	●	Clean those parts in contact with the tape.
Full Erase Head (Recorder only)	■	■	■	●	●	
Capstan Belt		●	●	●	●	Clean the rubber, and parts which the rubber touches.
Pinch Roller	■	●	●	●	●	
Capstan DD Unit		●	●	●	●	
Loading Motor					●	
Tension Band		●	●	●	●	
T Brake Band		●	●	●	●	
Clutch Ass'y		●	●	●	●	
Idler Arm Ass'y		●	●	●	●	
Capstan Shaft	■	■	■	■	■	
Tape Running Guide Post	■	■	■	■	■	Replace when rolling becomes abnormal.
Cylinder Unit	■	●	●	●	●	Clean the Head

■ : Clean
● : Check it and if necessary, replace it.

CONFIRMATION OF HOURS USED

POWER ON total hours and PLAY/REC total hours can be checked on the screen.
Total hours are displayed in 16 system of notation.

NOTE: If you set factory initialization, the total hours is reset to "0".

1. Turn on the POWER, and set to the TV mode.
2. Set the VOLUME to minimum.
3. Press both VOL. DOWN button on the set and the Channel button **(6)** on the remote control for more than 2 seconds.
4. After the confirmation of using hours, turn off the power.

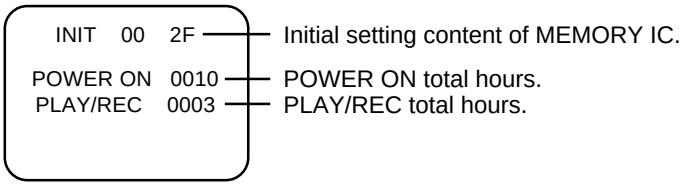

(16 x 16 x 16 x thousands digit value) + (16 x 16 x hundreds digit value) + (16 x tens digit value) + (ones digit value)

PREVENTIVE CHECKS AND SERVICE INTERVALS

CLEANING

NOTE

After cleaning the heads with isopropyl alcohol, do not run a tape until the heads dry completely. If the heads are not completely dry and alcohol gets on the tape, damage may occur.

1. AUDIO CONTROL HEAD

Clean the Audio Control Head with a cotton stick soaked by alcohol. Clean the full erase head in the same manner. **(Refer to the figure below.)**

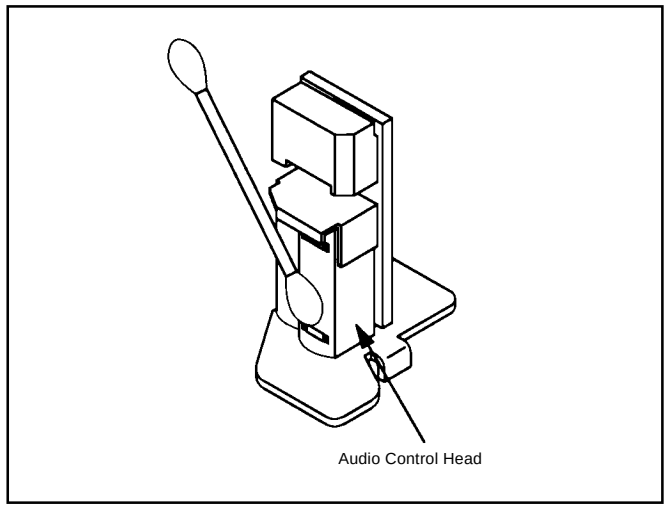

2. TAPE RUNNING SYSTEM

When cleaning the tape transport system, use gauze moistened with isopropyl alcohol.

3. CYLINDER

Wrap a piece of chamois around your finger. Dip it in isopropyl alcohol. Hold it to the cylinder head softly. Turn the cylinder head counterclockwise to clean it (in the direction of the arrow). **(Refer to the figure below.)**

NOTE

Do not exert force against the cylinder head. Do not move the chamois upward or downward on the head.
Use the chamois one by one.

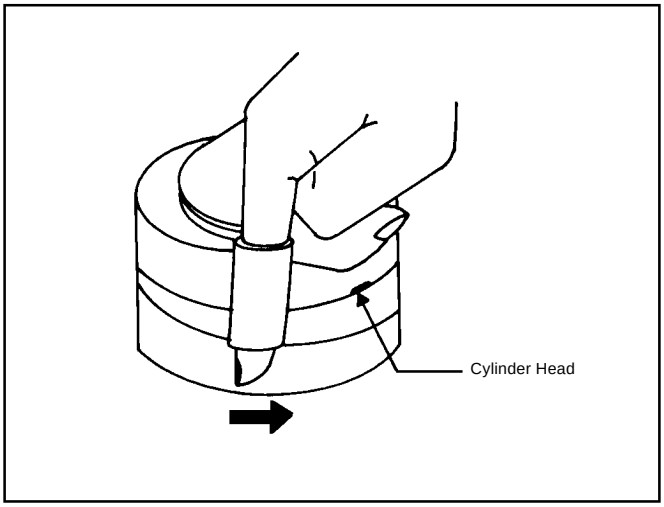

WHEN REPLACING EEPROM (MEMORY) IC

If a service repair is undertaken where it has been required to change the MEMORY IC, the following steps should be taken to ensure correct data settings while making reference to TABLE 1.

NOTE: No need to set data for after position INI 44 due to the adjustment value.

INI	+0	+1	+2	+3	+4	+5	+6	+7	+8	+9	+A	+B	+C	+D	+E	+F
00	2F	40	34	02	C3	DD	47	22	86	44	D0	18	A6	01	86	55
10	40	0F	E3	52	03	02	00	48	00	F6	15	4B	16	54	83	B1
20	99	96	8B	9F	B7	A5	91	B6	1A	0B	3D	08	37	16	27	30
30	45	31	19	FF	00	0A	0E	00	00	23	FF	FF	FF	80	88	83
40	88	89	88	FF	FF	---	---	---	---	---	---	---	---	---	---	---

Table 1

1. Enter DATA SET mode by setting VOLUME to minimum.
2. Press both VOL. DOWN button on the set and the Channel button **(6)** on the remote control for more than 2 seconds. ADDRESS and DATA should appear as FIG 1.

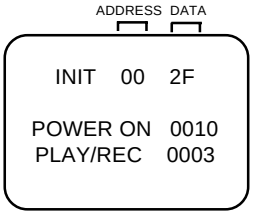

Fig. 1

3. ADDRESS is now selected and should "blink". Using the UP or DOWN button on the remote, step through the ADDRESS until required ADDRESS to be changed is reached.
4. Press ENTER to select DATA. When DATA is selected, it will "blink".
5. Again, step through the DATA using UP or DOWN button until required DATA value has been selected.
6. Pressing ENTER will take you back to ADDRESS for further selection if necessary.
7. Repeat steps 3 to 6 until all data has been checked.
8. When satisfied correct DATA has been entered, turn POWER off (return to STANDBY MODE) to finish DATA input.

After the data input, set to the initializing of shipping.

9. Turn POWER on.
10. Press both VOL. DOWN button on the set and the Channel button **(1)** on the remote control for more than 2 seconds.
11. After the finishing of the initializing of shipping, the unit will turn off automatically.

The unit will now have the correct DATA for the new MEMORY IC.

SERVICING FIXTURES AND TOOLS

Alignment Tape 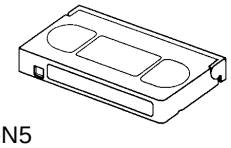 ST-N5 ST-NF	Back tension cassette gauge 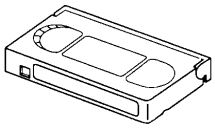 70909103	Torque cassette gauge (KT-300NR) 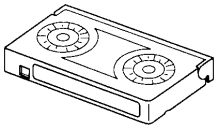 70909199	Taper nut driver 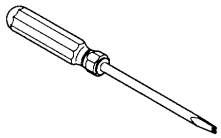 70909228
VTR cleaning kit 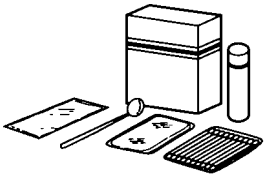	VTR lubrication kit 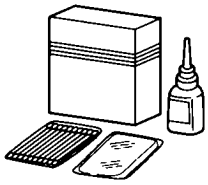	Grease 	JG002B Adapter JG002E Dial Torque Gauge (10~90gf•cm) JG002F (60~600gf•cm) 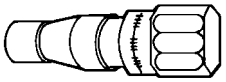
JG022 Master Plane 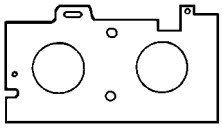	JG024A Reel Disk Height Adjustment Jig 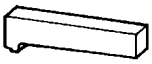	JG153 X Value Adjustment Screwdriver 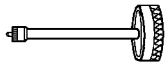	JG185 Tentelometer 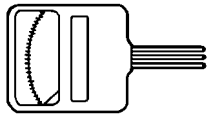

Ref. No.	Part No.	Parts Name	Remarks
JG002B	APJG002B00	Adapter	VSR Torque, Brake Torque (S Reel/T Reel Ass'y)
JG002E	APJG002E00	Dial Torque Gauge (10~90gf•cm)	Brake Torque (T Reel Ass'y)
JG002F	APJG002F00	Dial Torque Gauge (60~600gf•cm)	VSR Torque, Brake Torque (S Reel)
JG022	APJG022000	Master Plane	Reel Disk Height Adjustment
JG024A	APJG024A00	Reel Disk Height Adjustment Jig	Reel Disk Height Adjustment
JG153	APJG153000	X Value Adjustment Screwdriver	X Value Adjustment
JG185	APJG185000	Tentelometer	Confirmation of Tape Tension on Playback

PREPARATION FOR SERVICING

1. Set the VOLUME to minimum.
2. Press both VOL. DOWN button on the set and the FF button on the set for more than 2 seconds.
   (The BOT, EOT, and the Reel Sensor do not work and the VCR deck can be operated without a cassette tape.)
3. In case of using a cassette tape, press the STOP/EJECT button to insert or eject a cassette tape.
   Turn on the power and re-check the cable before checking the trouble points.

MECHANICAL ADJUSTMENTS

1. CONFIRMATION AND ADJUSTMENT

Read the following NOTES before starting work.

- Place an object which weighs between 450g~500g on the Cassette Tape to keep it steady when you want to make the tape run without the Cassette Holder. (Do not place an object which weighs over 500g.)

1-1: CONFIRMATION AND ADJUSTMENT OF REEL DISK HEIGHT

1. Turn on the power and set to the STOP mode.
2. Set the master plane **(JG022)** and reel disk height adjustment jig **(JG024A)** on the mechanism framework, taking care not to scratch the drum, as shown in **Fig. 1-1-A**.
3. While turning the reel and confirm the following points. Check if the surface "A" of reel disk is lower than the surface "B" of reel disk height adjustment jig **(JG024A)** and is higher than the surface "C". If it is not passed, place the height adjustment washers and adjust to 10(+2, -0)mm.
4. Adjust the other reel in the same way.

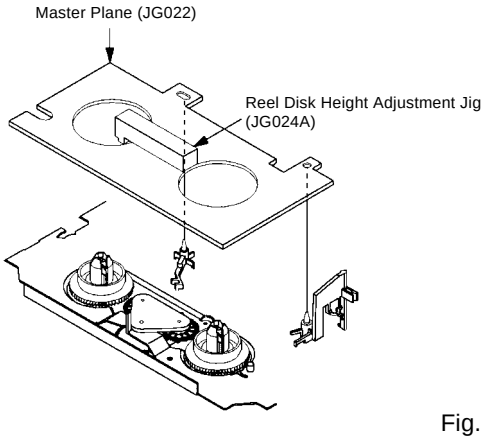

Fig. 1-1-A

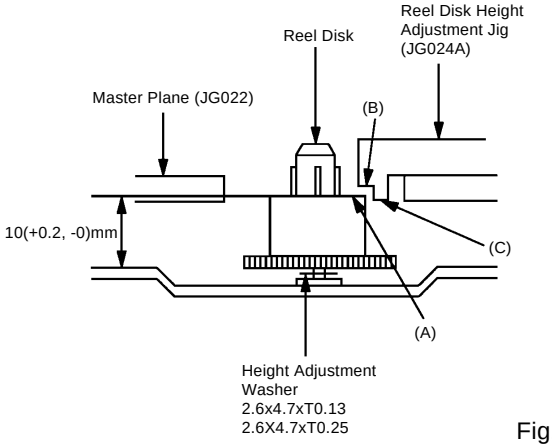

Fig. 1-1-B

1-2: CONFIRMATION AND ADJUSTMENT OF TENSION POST POSITION

1. Set to the PLAY mode.
2. Adjust the adjusting section for the Tension Arm position so that the Tension Arm top is within the standard line of Main Chassis.
3. While turning the S Reel clockwise, confirm that the edge of the Tension Arm is located in the position described above.

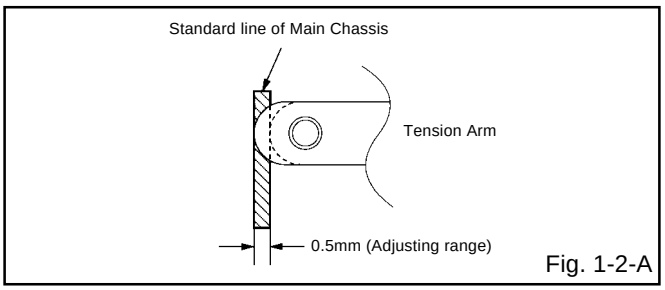

Fig. 1-2-A

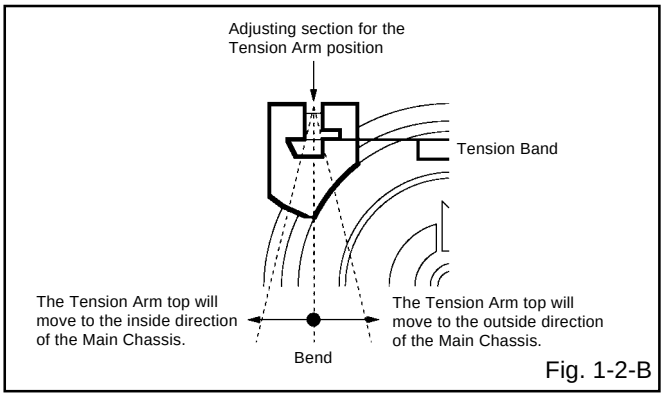

Fig. 1-2-B

1-3: CONFIRMATION OF PLAYBACK TORQUE AND BACK TENSION TORQUE DURING PLAYBACK

1. Load a video tape (T-120) recorded in standard speed mode. Set the unit to the PLAY mode.
2. Install the tentelometer (JG185) as shown in **Fig. 1-3**. Confirm that the meter indicates 20 ± 2gf in the beginning of playback.

• USING A CASSETTE TYPE TORQUE TAPE **(KT-300NR)**

1. After confirmation and adjustment of Tension Post position **(Refer to item 1-2)**, load the cassette type torque tape **(KT-300NR)** and set to the PLAY mode.
2. Confirm that the right meter of the torque tape indicates 50~90gf•cm during playback in SP mode.
3. Confirm that the left meter of the torque tape indicates 25~40gf•cm during playback in SP mode.

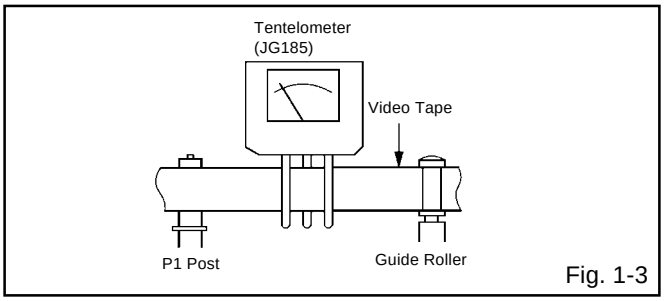

Fig. 1-3

MECHANICAL ADJUSTMENTS

1-4: CONFIRMATION OF VSR TORQUE

1. Install the Torque Gauge **(JG002F)** and Adapter **(JG002B)** on the S Reel. Set to the Picture Search (Rewind) mode. **(Refer to Fig.1-4-B)**
2. Then, confirm that it indicates 120~180gf•cm.

NOTE

Install the Torque Gauge on the reel disk firmly. Press the REW button to turn the reel disk.

1-5: CONFIRMATION OF REEL BRAKE TORQUE

(S Reel Brake) **(Refer to Fig. 1-4-B)**

1. Once set to the Fast Forward mode then set to the Stop mode. While, unplug the AC cord when the Pinch Roller Block is on the position of **Fig. 1-4-A**.
2. Move the Idler Ass'y from the S Reel.
3. Install the Torque Gauge **(JG002F)** and Adapter **(JG002B)** on the S Reel. Turn the Torque Gauge **(JG002F)** clockwise.
4. Then, confirm that it indicates 60~100gf•cm.

(T Reel Brake) **(Refer to Fig. 1-4-B)**

1. Once set to the Fast Forward mode then set to the Stop mode. While, unplug the AC cord when the Pinch Roller Block is on the position of **Fig. 1-4-A**.
2. Move the Idler Ass'y from the T Reel.
3. Install the Torque Gauge **(JG002E)** and Adapter **(JG002B)** on the T reel. Turn the Torque Gauge **(JG002E)** counterclockwise.
4. Then, confirm that it indicates 30~50gf•cm.

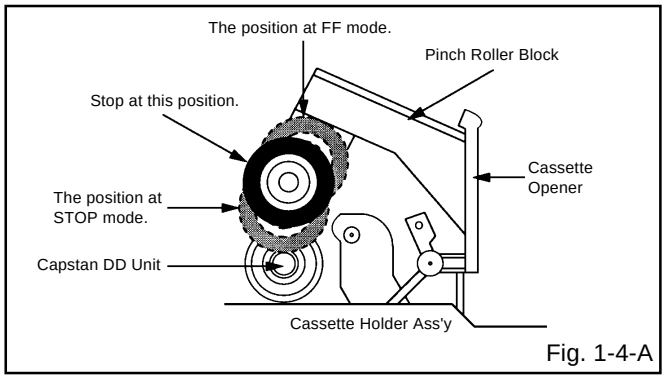

Fig. 1-4-A

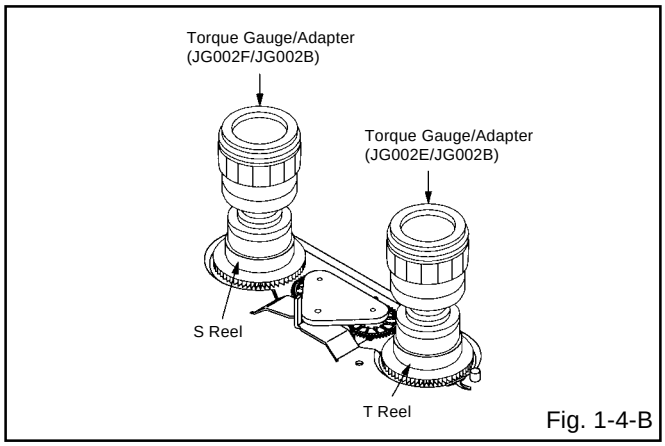

Fig. 1-4-B

NOTE

If the torque is out of the range, replace the following parts.

Check item	Replacement Part
1-4	Idler Ass'y/Clutch Ass'y
1-5	S Reel side: S Reel/Tension Band/Tension Connect/Tension Arm Ass'y T Reel side: T Reel/T Brake Band//T Brake Spring/T Brake Arm

2. CONFIRMATION AND ADJUSTMENT OF TAPE RUNNING MECHANISM

Tape Running Mechanism is adjusted precisely at the factory. Adjustment is not necessary as usual. When you replace the parts of the tape running mechanism because of long term usage or failure, the confirmation and adjustment are necessary.

2-1: GUIDE ROLLER

1. Playback the VHS Alignment Tape.
2. Connect CH-1 of the oscilloscope to **TP4501 (Envelope)** and CH-2 to **TP102 (SW Pulse)**.
3. Press both VOL. DOWN button on the set and the Channel button **(5)** on the remote control for more than 2 seconds to set tracking to center.
4. Trigger with SW Pulse and observe the envelope. **(Refer to Fig. 2-1-A)**
5. When observing the envelope, adjust the Taper Nut Driver slightly until the envelope will be flat.
   Even if you press the Tracking Button, adjust so that flatness is not moved so much.
6. Adjust so that the A : B ratio is better than 3 : 2 as shown in **Fig. 2-1-B**, even if you press the Tracking Button to move the envelope (The envelope waveform will begin to decrease when you press the Tracking Button).
7. Adjust the PG shifter during playback.
   (Refer to the ELECTRICAL ADJUSTMENTS)

NOTE

After adjustment, confirm and adjust A/C head.
(Refer to item 2-2)

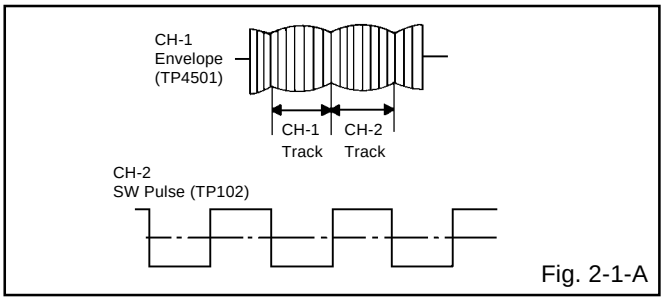

Fig. 2-1-A

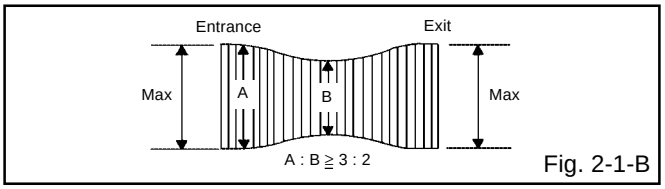

Fig. 2-1-B

MECHANICAL ADJUSTMENTS

2-2: CONFIRMATION AND ADJUSTMENT OF AUDIO/ CONTROL HEAD

When the Tape Running Mechanism does not work well, adjust the following items.

1. Playback the VHS Alignment Tape.
2. Confirm that the reflected picture of stamp mark is appeared on the tape prior to P4 Cap as shown in **Fig. 2-2-A**.
   a) When the reflected picture is distorted, turn the screw ① clockwise until the distortion is disappeared.
   b) When the reflected picture is not distorted, turn the screw ① counterclockwise until little distortion is appeared, then adjust the a).
3. Turn the screw ② to set the audio level to maximum.
4. Confirm that the bottom of the Audio/ Control Head and the bottom of the tape is shown in **Fig. 2-2-C**.
   c) When the height is not correct, turn the screw ③ to adjust the height. Then, adjust the 1~3 again.

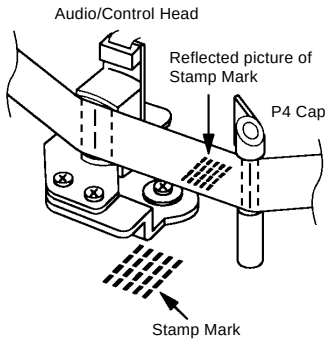

Fig. 2-2-A

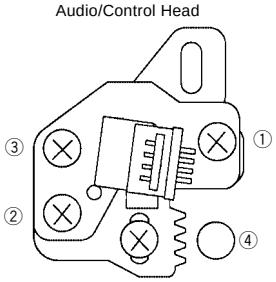

Fig. 2-2-B

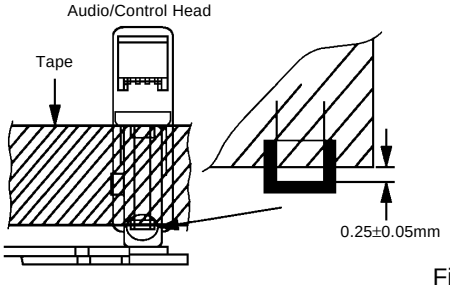

Fig. 2-2-C

2-3: TAPE RUNNING ADJUSTMENT (X VALUE ADJUSTMENT)

1. Confirm and adjust the height of the Reel Disk. **(Refer to item 1-1)**
2. Confirm and adjust the position of the Tension Post. **(Refer to item 1-2)**
3. Adjust the Guide Roller. **(Refer to item 2-1)**
4. Confirm and adjust the Audio/Control Head. **(Refer to item 2-2)**
5. Connect CH-1 of the oscilloscope to **TP102**, CH-2 to **TP4501** and CH-3 to **HOT side of Audio Out Jack**.
6. Playback the VHS Alignment Tape.
7. Press both VOL. DOWN button on the set and the Channel button **(5)** on the remote control for more than 2 seconds to set tracking to center.
8. Set the X Value adjustment driver **(JG153)** to the ④ of **Fig. 2-2-B**. Adjust X value so that the envelope waveform output becomes maximum. Check if the relation between Audio and Envelope waveform becomes (1) or (2) of **Fig. 2-3**.

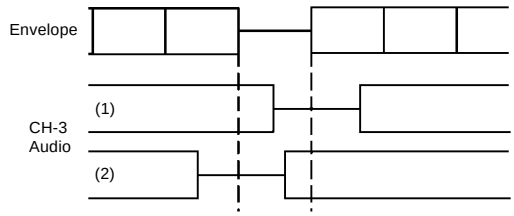

Fig. 2-3

MECHANICAL ADJUSTMENTS

3. MECHANISM ADJUSTMENT PARTS LOCATION GUIDE

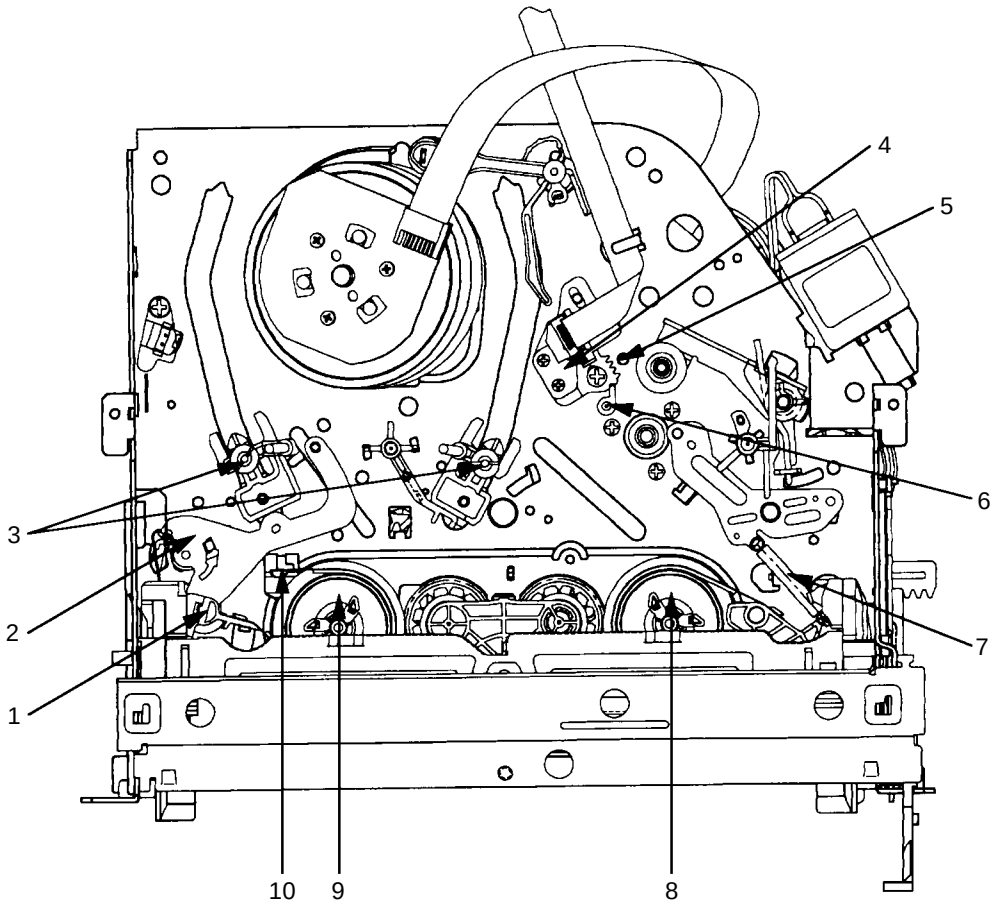

1. Tension Connect
2. Tension Arm
3. Guide Roller
4. Audio/Control Head
5. X value adjustment driver hole
6. P4 Post
7. T Brake Spring
8. T Reel
9. S Reel
10. Adjusting section for the Tension Arm position

ELECTRICAL ADJUSTMENTS

1. BEFORE MAKING ELECTRICAL ADJUSTMENTS

Read and perform these adjustments when repairing the circuits or replacing electrical parts or PCB assemblies.

CAUTION

- Use an isolation transformer when performing any service on this chassis.
- Before removing the anode cap, discharge electricity because it contains high voltage.
- When removing a PCB or related component, after unfastening or changing a wire, be sure to put the wire back in its original position.
- When you exchange IC and Transistor for a heat sink, apply the silicon grease on the contact section of the heat sink. Before applying new silicon grease, remove all the old silicon grease. (Old grease may cause damages to the IC and Transistor).

Prepare the following measurement tools for electrical adjustments.

1. Oscilloscope
2. Digital Voltmeter
3. Multi-sound Generator
4. Pattern Generator

On-Screen Display Adjustment

1. Set the VOLUME to minimum.
2. Press the VOL. DOWN button on the set and the Channel button **(9)** on the remote control for more than 2 seconds to appear the adjustment mode on the screen as shown in **Fig. 1-1**.

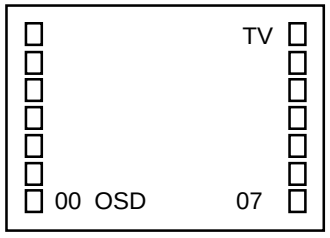

Fig. 1-1

3. Use the Channel UP/DOWN button or Channel button **(0-9)** on the remote control to select the options shown in **Fig. 1-2**.
4. Press the MENU button on the remote control to end the adjustments.

NO.	FUNCTION	NO.	FUNCTION
00	OSD H	18	BRI MAX
01	OSD C	19	BRI MIN
02	CUT OFF	20	CONT CENT
03	H.POSI	21	CONT MAX
04	H.BLK L	22	CONT MIN
05	H.BLK R	23	COL CENT
06	V.SIZE	24	COL MAX
07	V.POSI	25	COL MIN
08	V.LIN	26	TINT
09	VS.CORR	27	SHARP
10	V.COMP	28	SUB BIAS
11	R.BIAS	29	H.SIZE
12	G.BIAS	30	PARABOLA
13	B.BIAS	31	TRAPEZIUM
14	R.DRV	32	COR TOP
15	G.DRV	33	COR BTM
16	B.DRV	34	H.COMP
17	BRI CENT	35	T.STE
		38	H.FREQ

Fig. 1-2

2. BASIC ADJUSTMENTS (VCR SECTION)

2-1: PG SHIFTER

1. Connect CH-1 on the oscilloscope to **TP102** and CH-2 to **pin 4 of TP4201**.
2. Playback the alignment tape.**(JG001P)**
3. Press both VOL. DOWN button on the set and the Channel button **(5)** on the remote control for more than 2 seconds to set tracking to center.
4. Press the VOL. DOWN button on the set and the channel button **(3)** on the remote control for more than 2 seconds until the indicator REC disappears. If the indicator REC disappears, adjustment is completed.

(If the above adjustments doesn't work well:)

5. Press the VOL. DOWN button on the set and the channel button **(3)** on the remote control for more than 2 seconds until the indicator REC disappears.
6. When the REC indicator is blinking, press both VOL. DOWN button on the set and the channel button **(4)** on the remote control for more than 2 seconds and adjust the Tracking +/- button until the arising to the down of Head Switching Pulse becomes 6.5 ± 0.5H. **(Refer to Fig. 2-1-A, B)**

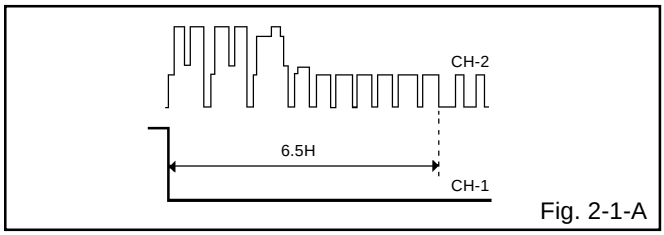

Fig. 2-1-A

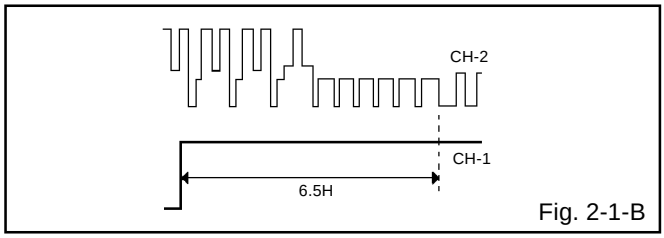

Fig. 2-1-B

ELECTRICAL ADJUSTMENTS

(TV SECTION)

2-2: CONSTANT VOLTAGE

1. Place the set in AV MODE without signal.
2. Using the remote control, set the brightness and contrast to normal position.
3. Connect the digital voltmeter to **TP401** and **HS402**.
4. Adjust the **VR502** until the digital voltmeter is 114 ± 0.5V.

2-3: CUT OFF

1. Adjust the unit to the following settings.
   BRI. CENTER=127, CONT MAX=100, R.BIAS=127, G.BIAS=127, B.BIAS=127, R.DRV=63, G.DRV=07, B.DRV=63.
2. Place the set in Aging Test for more than 15 minutes.
3. Place the set in AV MODE without signal.
4. Using the remote control, set the brightness and contrast to normal position.
5. Activate the adjustment mode display of **Fig. 1-1** and press the channel button **(02)** on the remote control to select "CUT OFF".
6. Adjust the **Screen Volume** until a dim raster is obtained.

2-4: WHITE BALANCE

NOTE: Adjust after performing CUT OFF adjustment.

1. Place the set in Aging Test for more than 15 minutes.
2. Receive the gray scale pattern from the Pattern Generator.
3. Using the remote control, set the brightness and contrast to normal position.
4. Activate the adjustment mode display of **Fig. 1-1** and press the channel button **(11)** on the remote control to select "R.BIAS".
5. Press the CH. UP/DOWN button on the remote control to select the "R.BIAS", "G.BIAS", "B.BIAS", "R.DRV", "B.DRV" or "G.DRV".
6. Adjust the LEFT/RIGHT button on the remote control to whiten the R.BIAS, G.BIAS, B.BIAS, R.DRV, B.DRV, and G.DRV at each step tone sections equally.
7. Perform the above adjustments 5 and 6 until the white color is achieved.

2-5: FOCUS

1. Receive the monoscope pattern.
2. Turn the Focus Volume fully counterclockwise once.
3. Adjust the **Focus Volume** until picture is distinct.

2-6: HORIZONTAL POSITION

1. Receive the monoscope pattern.
2. Using the remote control, set the brightness and contrast to normal position.
3. Activate the adjustment mode display of **Fig. 1-1** and press the channel button **(03)** on the remote control to select "H.POSI".
4. Press the VOL. UP/DOWN button on the remote control until the SHIFT quantity of the OVER SCAN on right and left becomes minimum.

2-7: VERTICAL POSITION

1. Receive the monoscope pattern.
2. Using the remote control, set the brightness and contrast to normal position.
3. Activate the adjustment mode display of **Fig. 1-1** and press the channel button **(07)** on the remote control to select "V.POSI".
4. Check if the step No. V.POSI is "00".
5. Adjust the **VR401** until the horizontal line becomes fit to the notch of the shadow mask. **(Refer to Fig.2-2)**

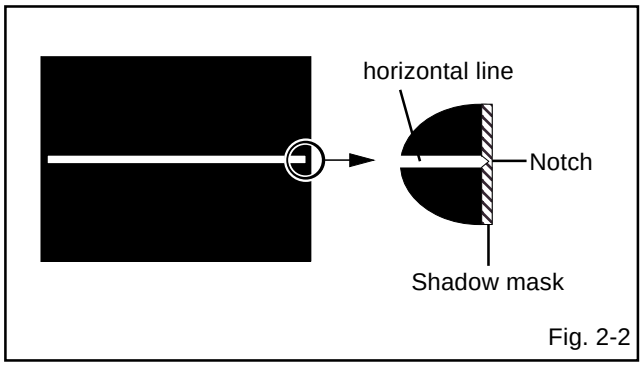

Fig. 2-2

2-8: VERTICAL SIZE

1. Receive the monoscope pattern.
2. Using the remote control, set the brightness and contrast to normal position.
3. Activate the adjustment mode display of **Fig. 1-1** and press the channel button **(06)** on the remote control to select "V.SIZE".
4. Press the VOL. UP/DOWN button on the remote control until the Up/Down OVER SCAN Quantity becomes equal to the Right/Left OVER SCAN Quantity.

2-9: VERTICAL LINEARITY

NOTE: Adjust after performing adjustments in section 2-8. After the adjustment of Vertical Linearity, reconfirm the Vertical Position and Vertical Size adjustments.

1. Receive the monoscope pattern.
2. Using the remote control, set the brightness and contrast to normal position.
3. Activate the adjustment mode display of **Fig. 1-1** and press the channel button **(08)** on the remote control to select "V.LIN".
4. Press the VOL. UP/DOWN button on the remote control until the SHIFT quantity of the OVER SCAN on upside and downside becomes minimum.

2-10: OSD HORIZONTAL

1. Activate the adjustment mode display of **Fig. 1-1**.
2. Press the VOL. UP/DOWN button on the remote control until the difference of A and B becomes minimum. **(Refer to Fig. 2-3)**

ELECTRICAL ADJUSTMENTS

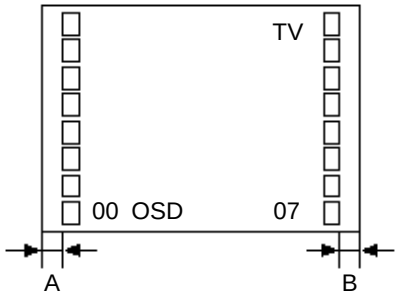

Fig. 2-3

2-11: BRIGHT CENTER

1. Receive the monoscope pattern. (RF Input)
2. Using the remote control, set the brightness and contrast to normal position.
3. Activate the adjustment mode display of **Fig. 1-1** and press the channel button **(17)** on the remote control to select "BRI CENT".
4. Press the VOL.UP/DOWN button on the remote control until the white 10% is starting to be visible.
5. Receive the monoscope pattern. (Audio Video Input)
6. Press the INPUT SELECT button on the remoted control to set to the AV mode. Then perform the above
7. adjustments 1, 2.
   Press the DVD button on the remote control to set to the DVD mode.
8. Activate the adjustment mode display of **Fig. 1-1** and press the channel button **(17)** on the remote control to select "BRI CENT".
9. Press the VOL. UP/DOWN button on the remote control to set the same step numbers as the AV mode.

2-12: TINT

1. Receive the color bar pattern. (RF Input)
2. Using the remote control, set the brightness, contrast, color and tint to normal position.
3. Connect the oscilloscope to **TP803**.
4. Activate the adjustment mode display of **Fig. 1-1** and press the channel button **(26)** on the remote control to select "TINT".
5. Press the VOL. UP/DOWN button on the remote control until the section "A" becomes a straight line **(Refer to Fig. 2-4)**.
6. Receive the color bar pattern. (Audio Video Input)
7. Press the INPUT SELECT button on the remote control to set to the AV mode. Then perform the above adjustments 2~5.
8. Press the DVD button on the remote control to set to the DVD mode.
9. Activate the adjustment mode display of **Fig. 1-1** and press the channel button **(26)** on the remote control to select "TINT".
10. Press the VOL. UP/DOWN button on the remote control until the contrast step No. becomes "66".

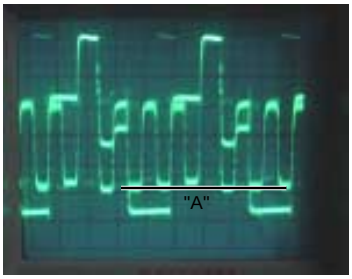

Fig. 2-4

2-13: COLOR CENTER

1. Receive the color bar pattern. (RF Input)
2. Using the remote control, set the brightness, contrast, color and tint to normal position.
3. Connect the oscilloscope to **TP802.**
4. Activate the adjustment mode display of **Fig. 1-1** and press the channel button **(23)** on the remote control to select "COL CENT".
5. Adjust the VOLTS RANGE VARIABLE knob of the oscilloscope until the range between white 100% and 0% is set to 4 scales on the screen of the oscilloscope.
6. Press the VOL. UP/DOWN button on the remote control until the red color level is adjusted to 110 ± 5% of the white level. **(Refer to Fig. 2-5)**
7. Receive the color bar pattern. (Audio Video Input)
8. Press the INPUT SELECT button on the remote control to set to the AV mode. Then perform the above adjustments 2~6.
9. Press the DVD button on the remote control to set to the DVD mode.
10. Activate the adjustment mode display of **Fig. 1-1** and press the channel button **(23)** on the remote control to select "COL CENT".
11. Press the VOL. UP/DOWN button on the remote control to set the same step numbers as the AV mode.

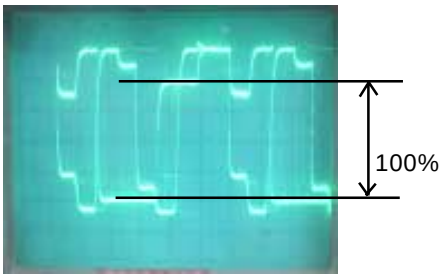

Fig. 2-5

ELECTRICAL ADJUSTMENTS

2-14: CONTRAST MAX

1. Activate the adjustment mode display of **Fig. 1-1** and press the channel button **(21)** on the remote control to select "CONT MAX".
2. Press the LEFT/RIGHT button on the remote control until the contrast step No. becomes "60".
3. Receive a broadcast and check if the picture is normal.
4. Press the INPUT SELECT button on the remote control to set to the AV mode.
5. Press the DVD button on the remote control to set to the DVD mode.
6. Activate the adjustment mode display of **Fig. 1-1** and press the channel button **(21)** on the remote control to select "CONT MAX".
7. Press the VOL. UP/DOWN button on the remote control to set the same step numbers as the AV mode.

2-15: Confirmation of Fixed Value (step No.)

Please check if the fixed values of the each adjustment items are set correctly referring below.

NO.	FUNCTION	RF	AV	DVD
01	OSD C	02	02	02
04	H.BLK L	02	02	02
05	H.BLK R	02	02	02
09	VS.CORR	07	07	07
10	V.COMP	03	03	03
15	G.DRV	07	07	07
18	BRI MAX	100	100	100
19	BRI MIN	25	25	25
20	CONT CENT	25	25	25
22	CONT MIN	10	10	10
24	COL MAX	127	127	127
25	COL MIN	00	00	00
27	SHARP	30	30	15
28	SUB BIAS	20	20	20
29	H.SIZE	00	00	00
30	PARABOLA	00	00	00
31	TRAPEZIUM	00	00	00
32	COR TOP	00	00	00
33	COR BTM	00	00	00
34	H.COMP	00	00	00
35	T.STE	00	00	00

ELECTRICAL ADJUSTMENTS

3. PURITY AND CONVERGENCE ADJUSTMENTS

NOTE

1. Turn the unit on and let it warm up for at least 30 minutes before performing the following adjustments.
2. Place the CRT surface facing east or west to reduce the terrestrial magnetism.
3. Turn ON the unit and demagnetize with a Degauss Coil.

3-1: STATIC CONVERGENCE (ROUGH ADJUSTMENT)

1. Tighten the screw for the magnet. Refer to the adjusted CRT for the position. **(Refer to Fig. 3-1)**
   If the deflection yoke and magnet are in one body, untighten the screw for the body.
2. Receive the green raster pattern from the color bar generator.
3. Slide the deflection yoke until it touches the funnel side of the CRT.
4. Adjust center of screen to green, with red and blue on the sides, using the pair of purity magnets.
5. Switch the color bar generator from the green raster pattern to the crosshatch pattern.
6. Combine red and blue of the 3 color crosshatch pattern on the center of the screen by adjusting the pair of 4 pole magnets.
7. Combine red/blue (magenta) and green by adjusting the pair of 6 pole magnets.
8. Adjust the crosshatch pattern to change to white by repeating steps 6 and 7.

3-2: PURITY

NOTE

Adjust after performing adjustments in section 3-1.

1. Receive the green raster pattern from color bar generator.
2. Adjust the pair of purity magnets to center the color on the screen.
   Adjust the pair of purity magnets so the color at the ends are equally wide.
3. Move the deflection yoke backward (to neck side) slowly, and stop it at the position when the whole screen is green.
4. Confirm red and blue color.
5. Adjust the slant of the deflection yoke while watching the screen, then tighten the fixing screw.

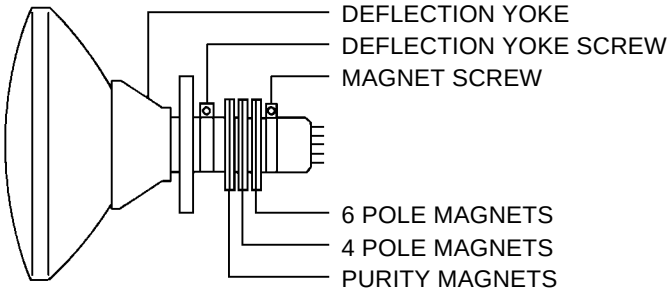

Fig. 3-1

3-3: STATIC CONVERGENCE

NOTE

Adjust after performing adjustments in section 3-2.

1. Receive the crosshatch pattern from the color bar generator.
2. Combine red and blue of the 3 color crosshatch pattern on the center of the screen by adjusting the pair of 4 pole magnets.
3. Combine red/blue (magenta) and green by adjusting the pair of 6 pole magnets.

3-4: DYNAMIC CONVERGENCE

NOTE

Adjust after performing adjustments in section 3-3.

1. Adjust the differences around the screen by moving the deflection yoke upward/downward and right/left.
   (Refer to Fig. 3-2-a)
2. Insert three wedges between the deflection yoke and CRT funnel to fix the deflection yoke.
   (Refer to Fig. 3-2-b)

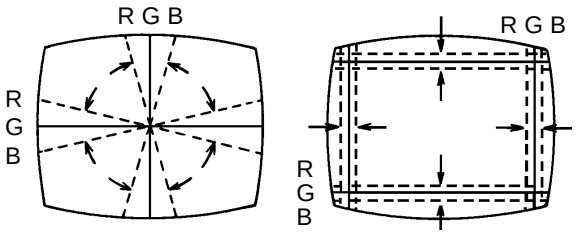

UPWARD/DOWNWARD SLANT RIGHT/LEFT SLANT

Fig. 3-2-a

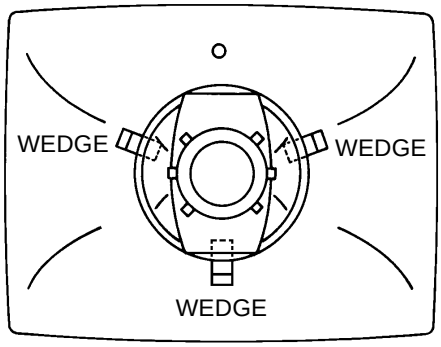

WEDGE POSITION

Fig. 3-2-b

ELECTRICAL ADJUSTMENTS

4. ELECTRICAL ADJUSTMENT PARTS LOCATION GUIDE (WIRING CONNECTION)

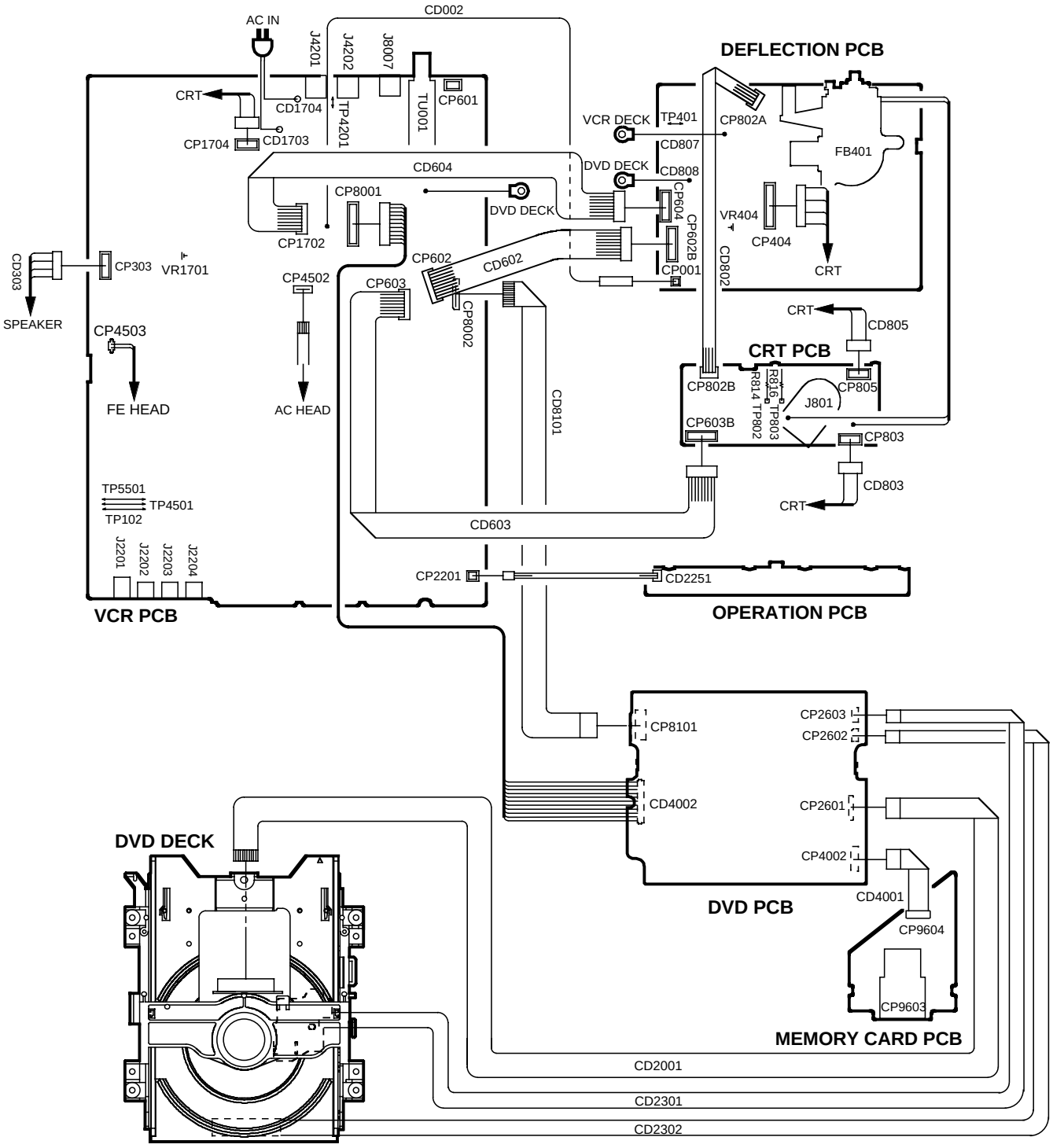

DVD BLOCK DIAGRAM

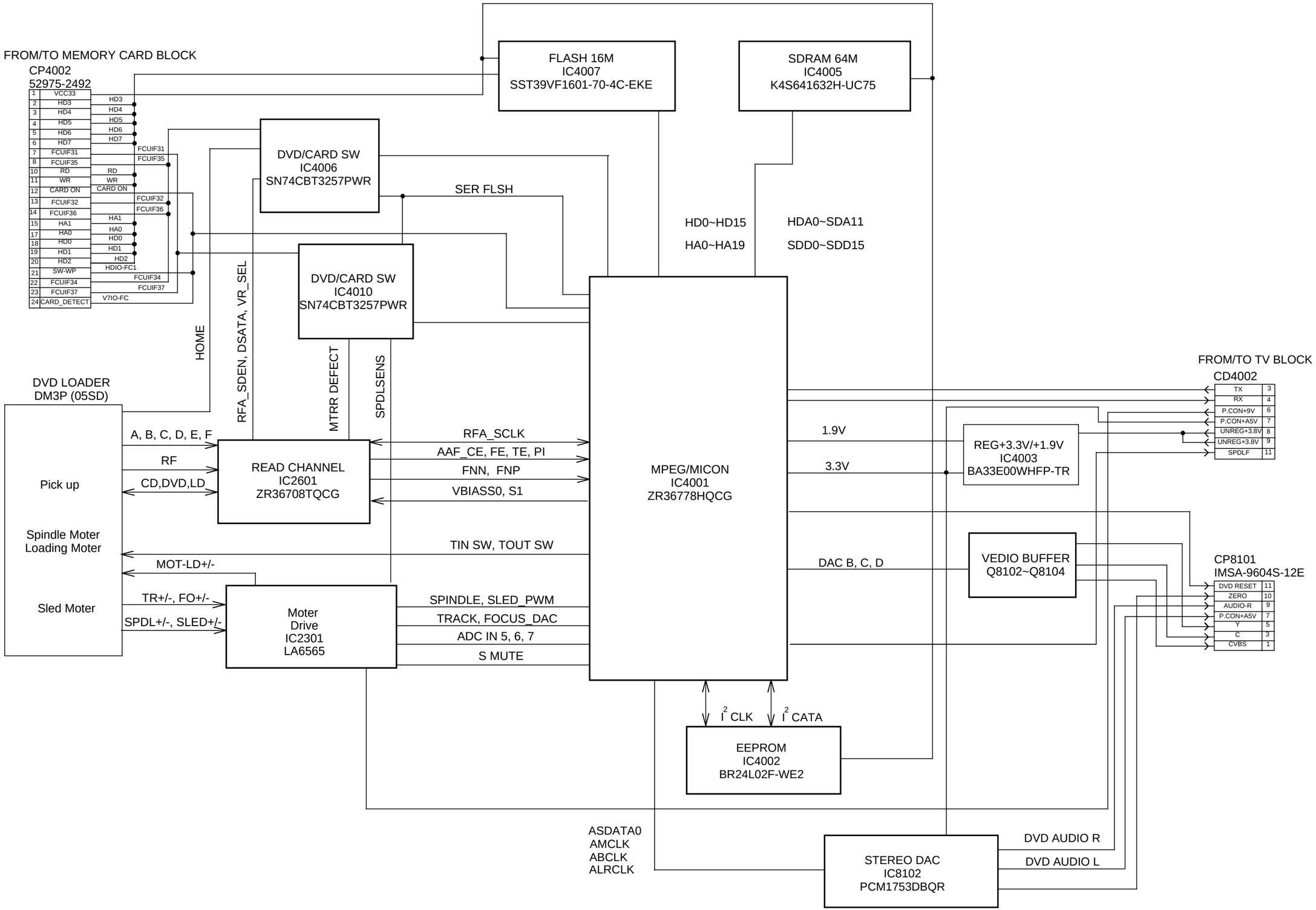

MEMORY CARD BLOCK DIAGRAM

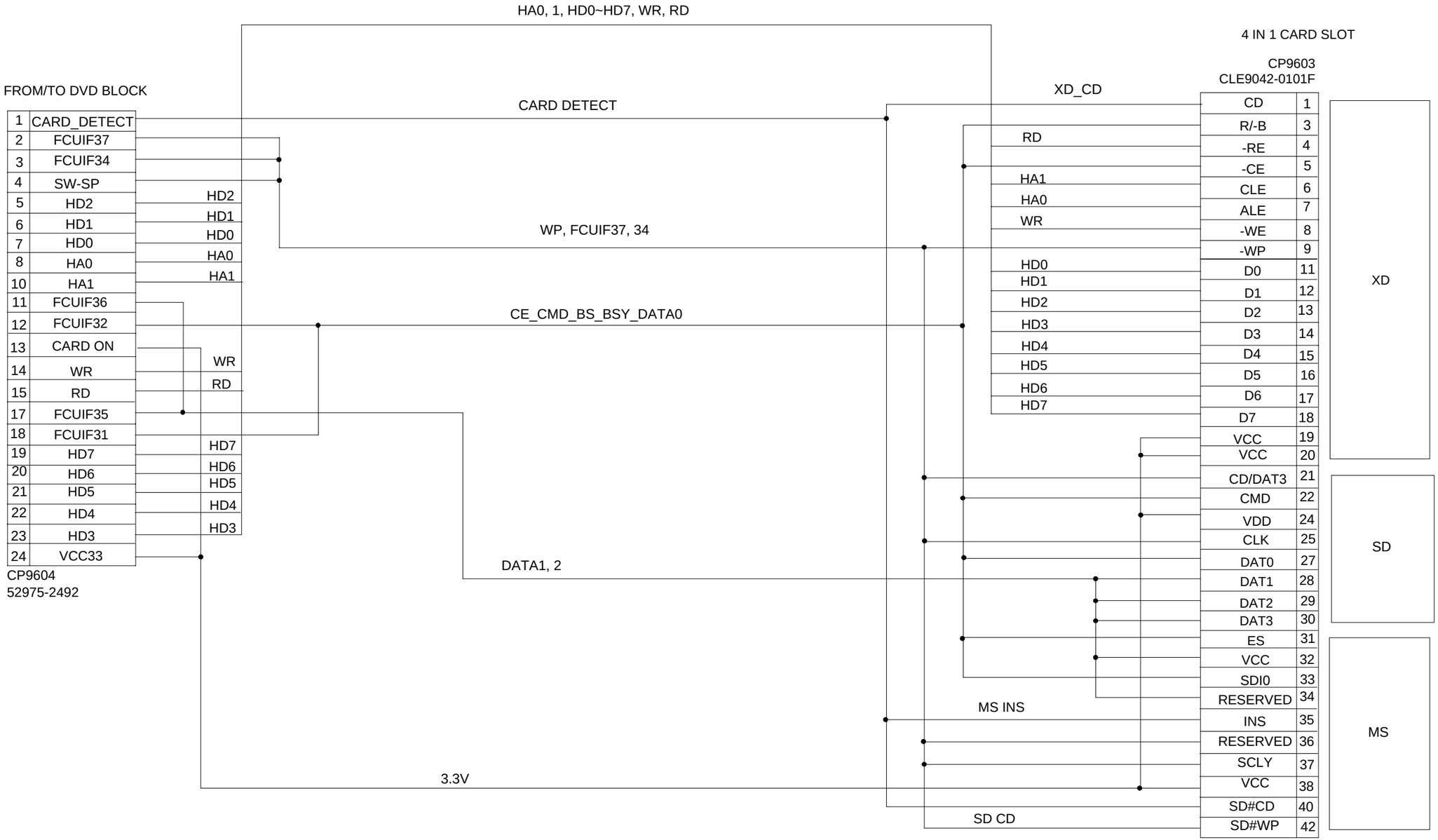

Y/C/AUDIO/HEAD AMP BLOCK DIAGRAM

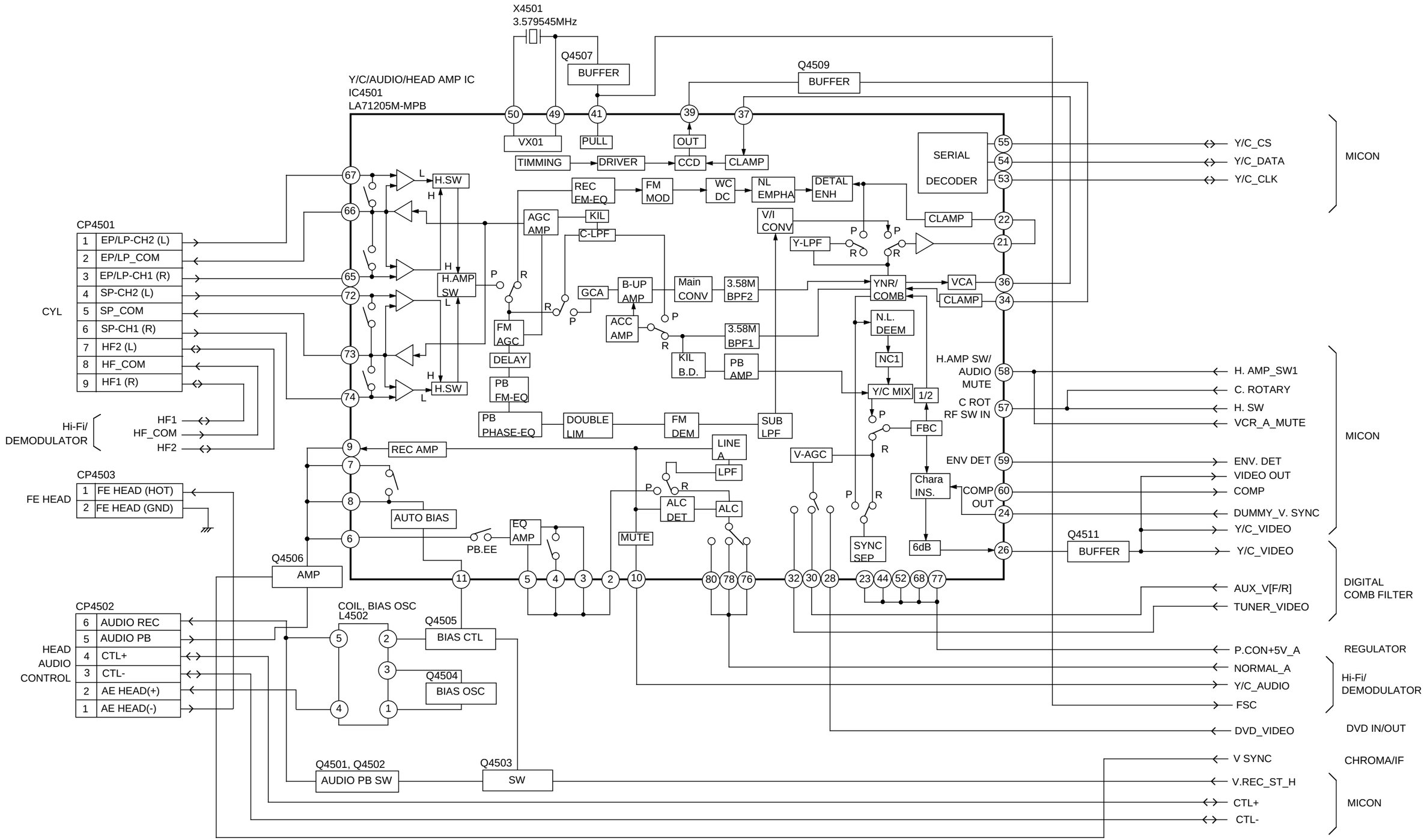

MICON BLOCK DIAGRAM

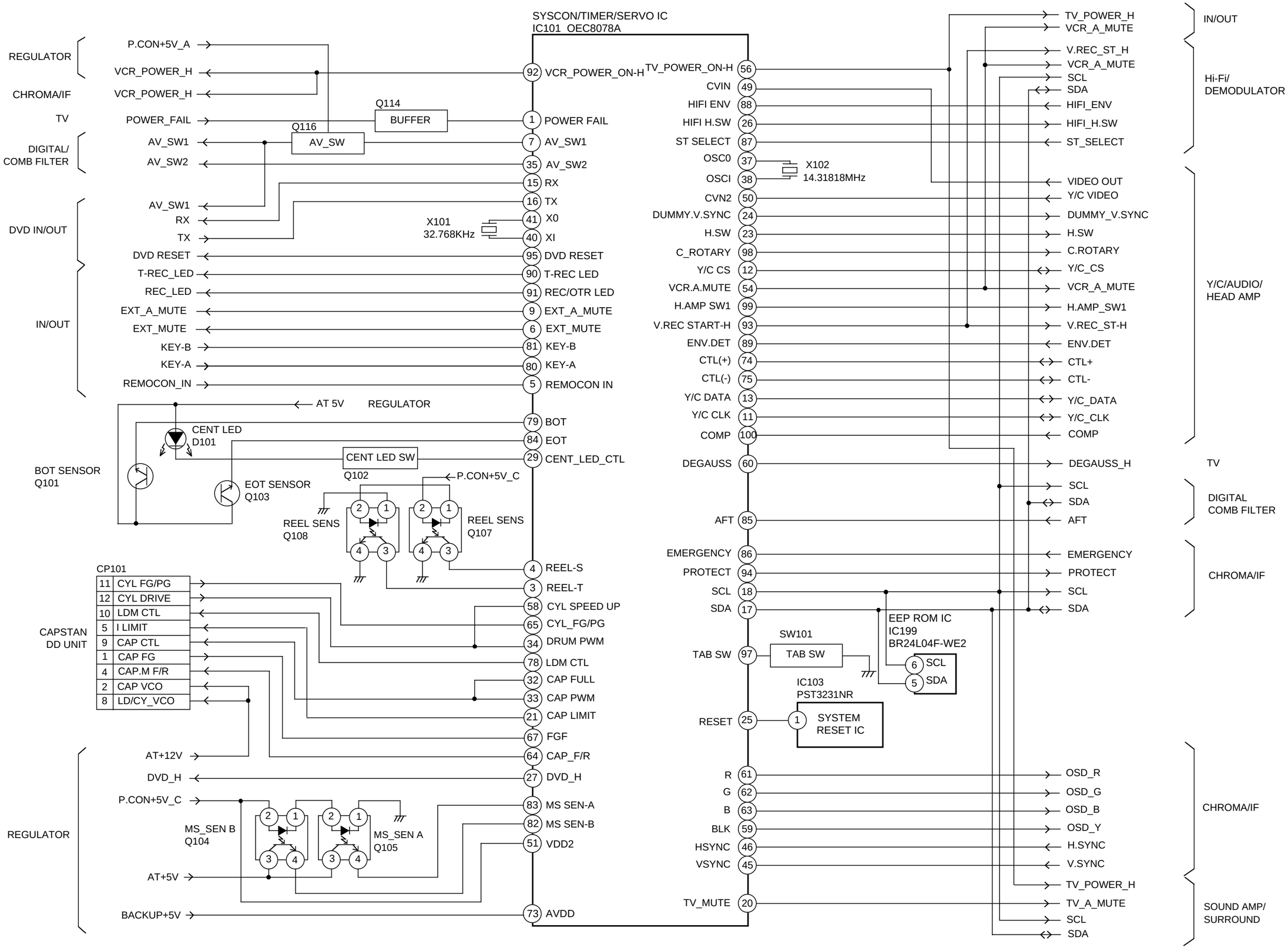

IN/OUT BLOCK DIAGRAM

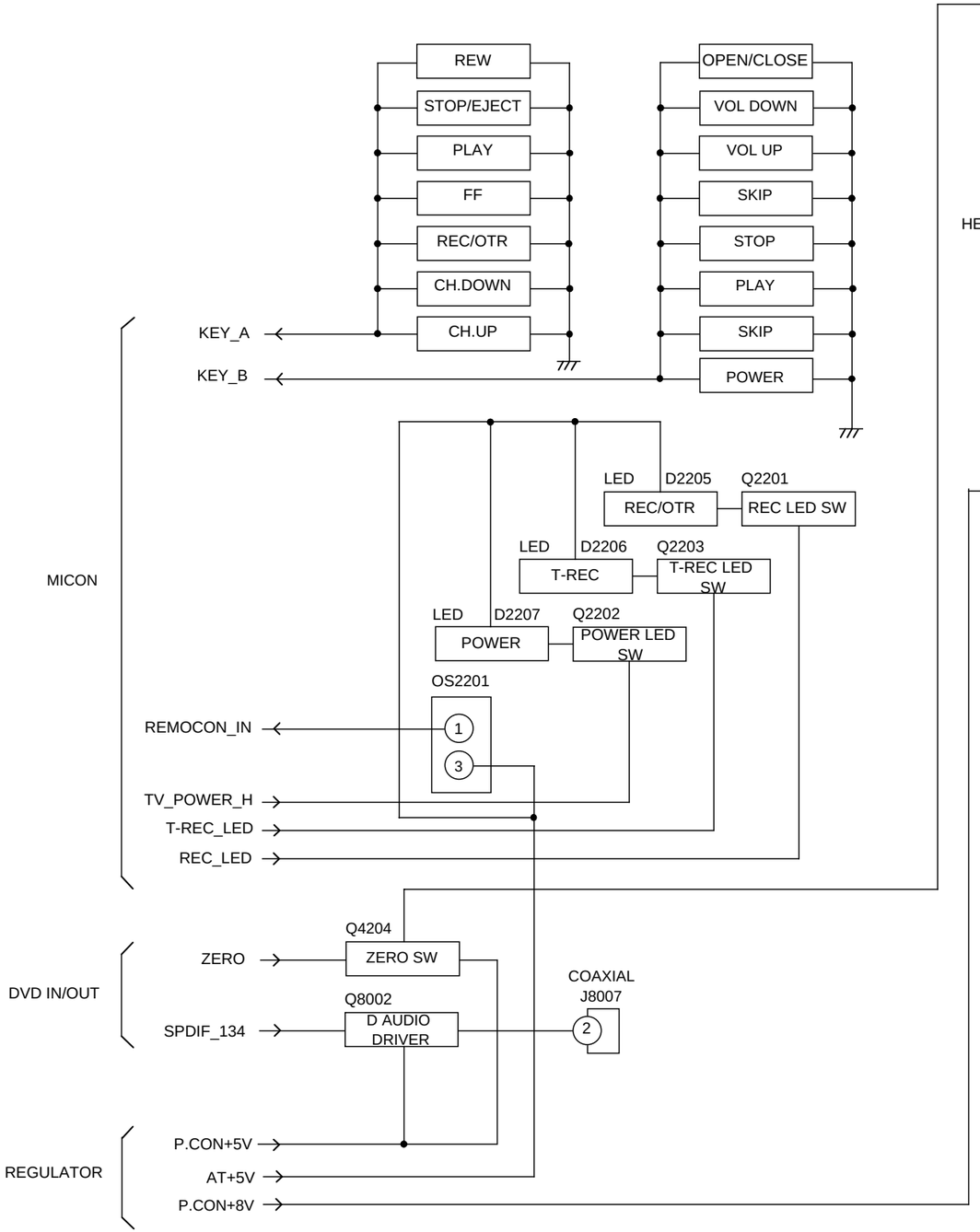

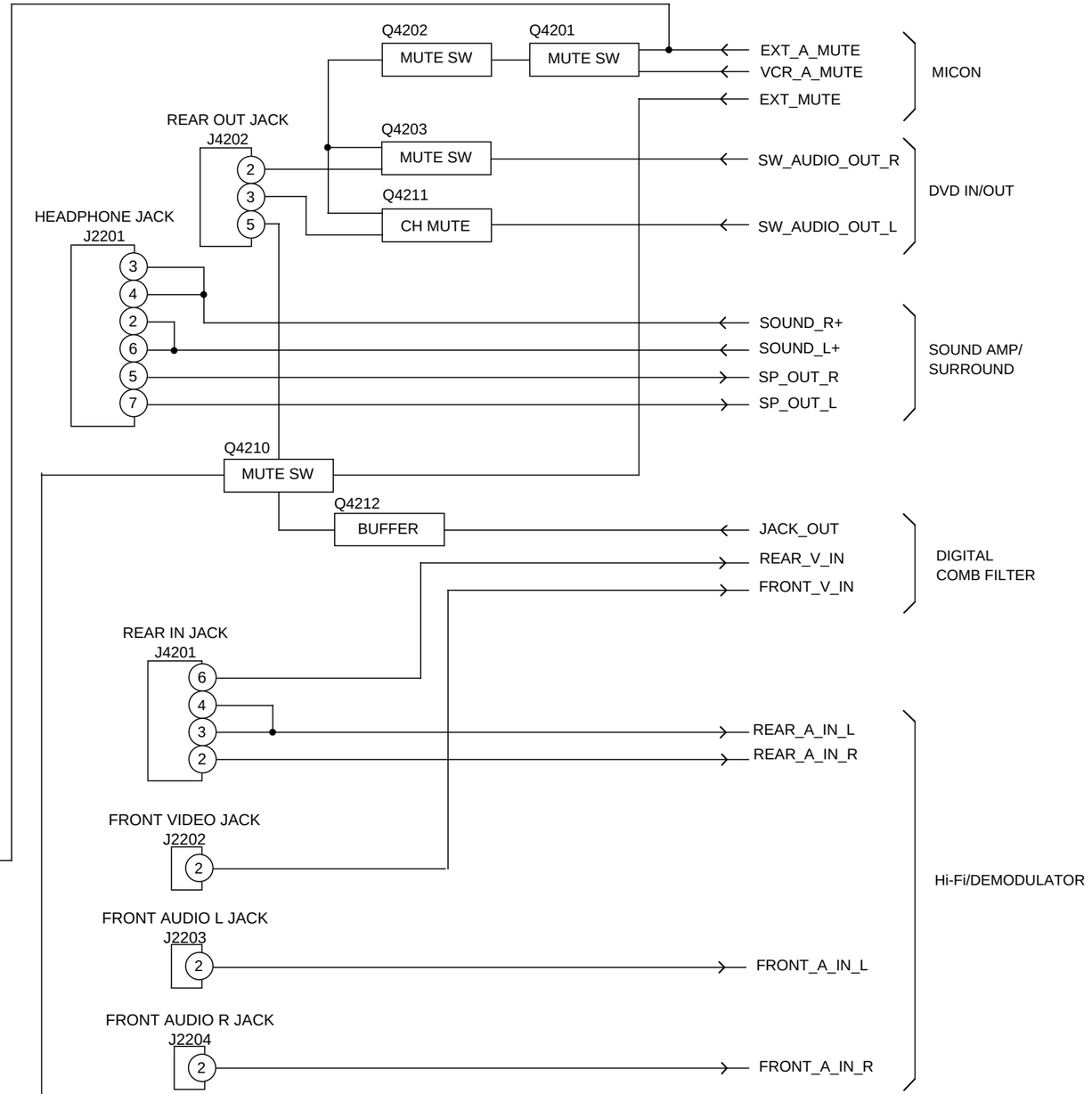

CHROMA/IF BLOCK DIAGRAM

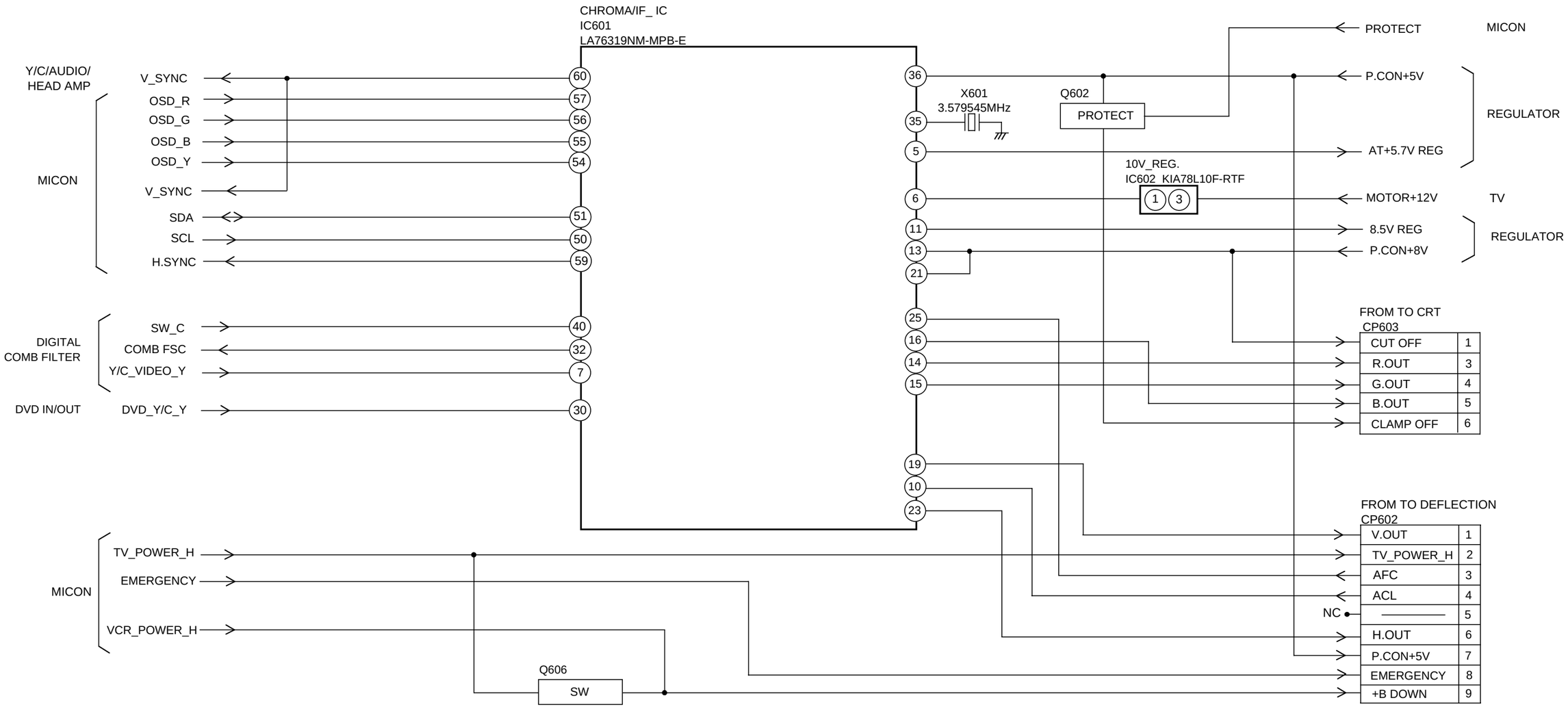

SOUND AMP/SURROUND BLOCK DIAGRAM

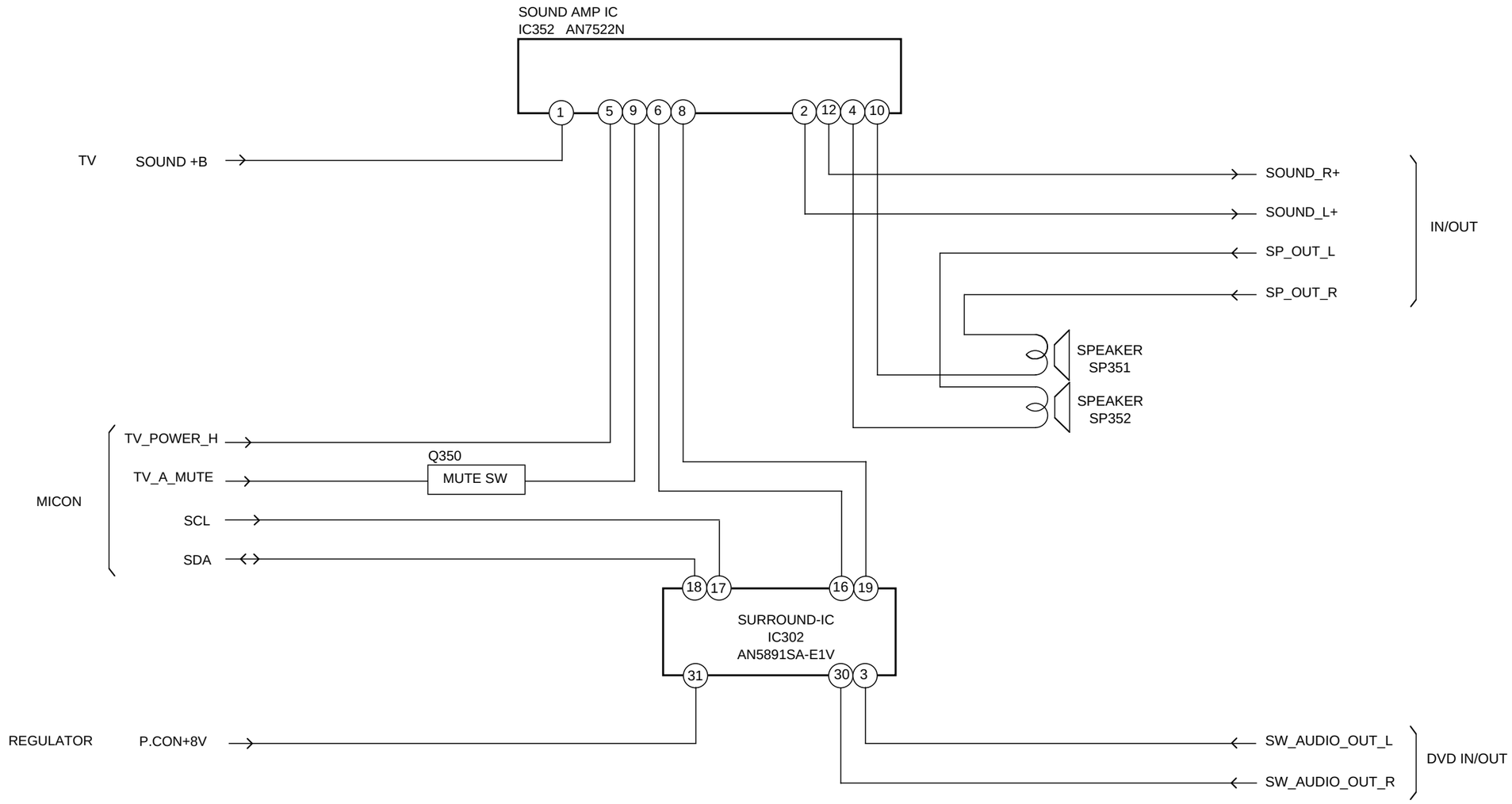

Hi-Fi/DEMODULATOR BLOCK DIAGRAM

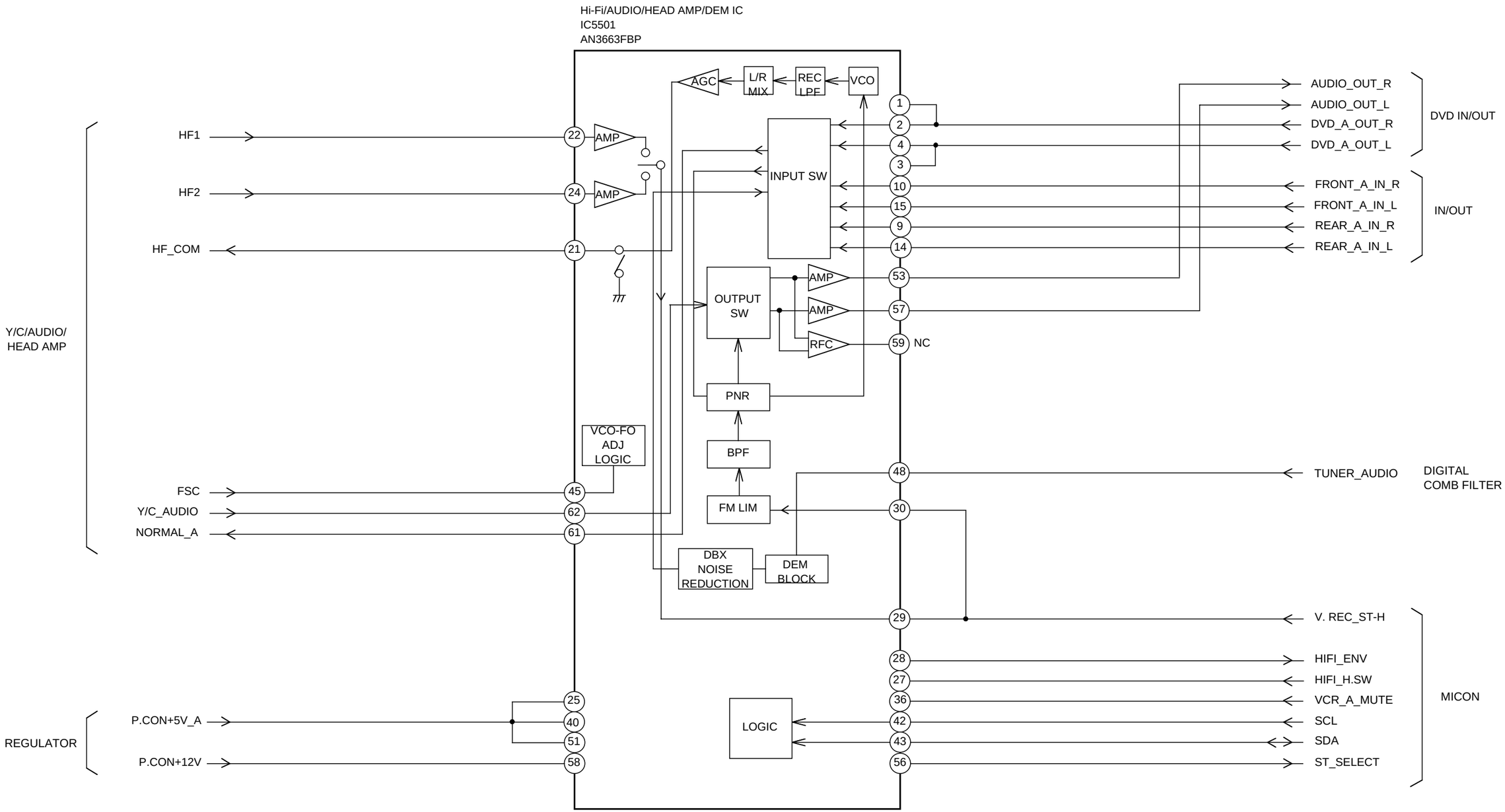

DIGITAL COMB FILTER BLOCK DIAGRAM

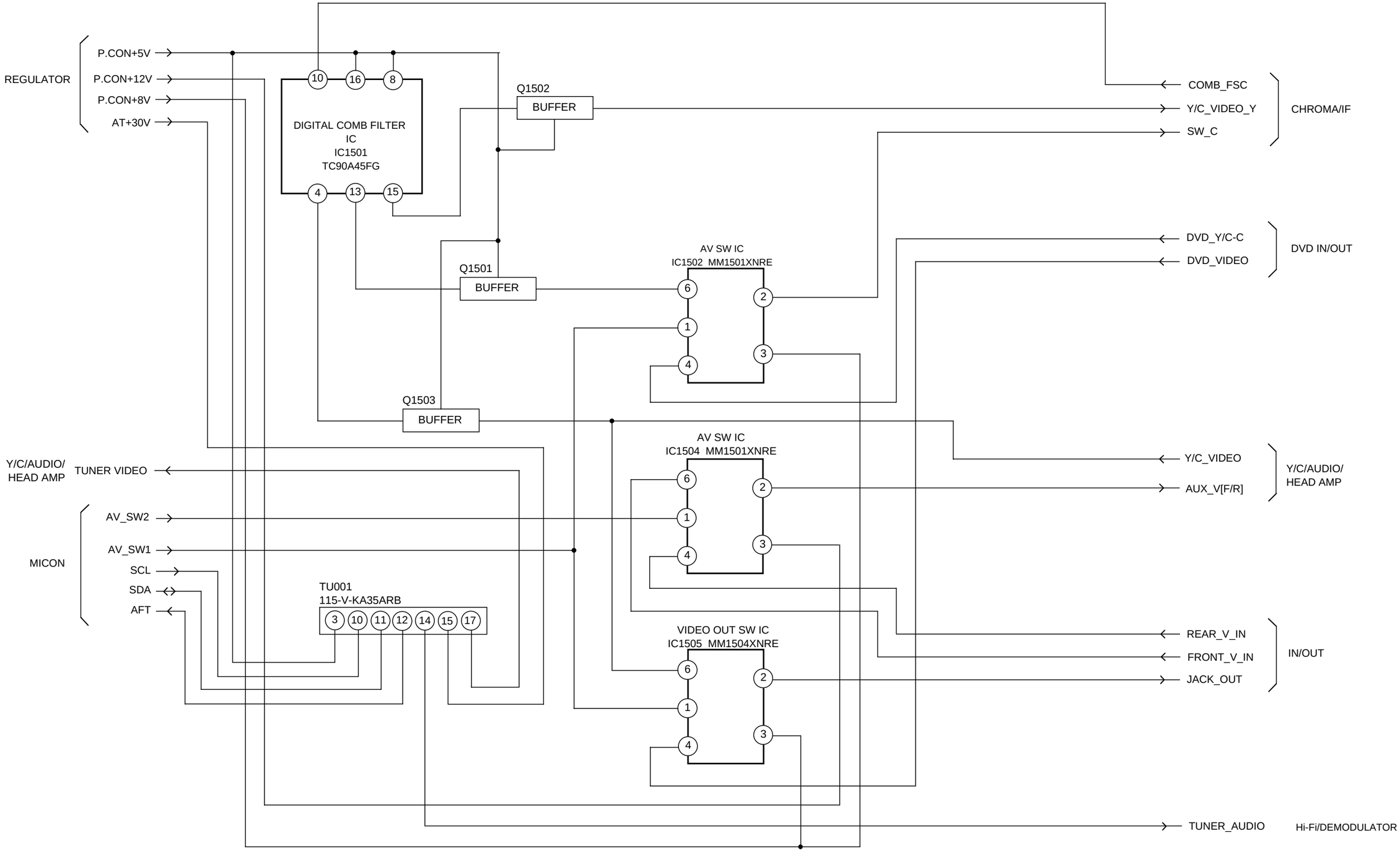

DVD IN/OUT BLOCK DIAGRAM

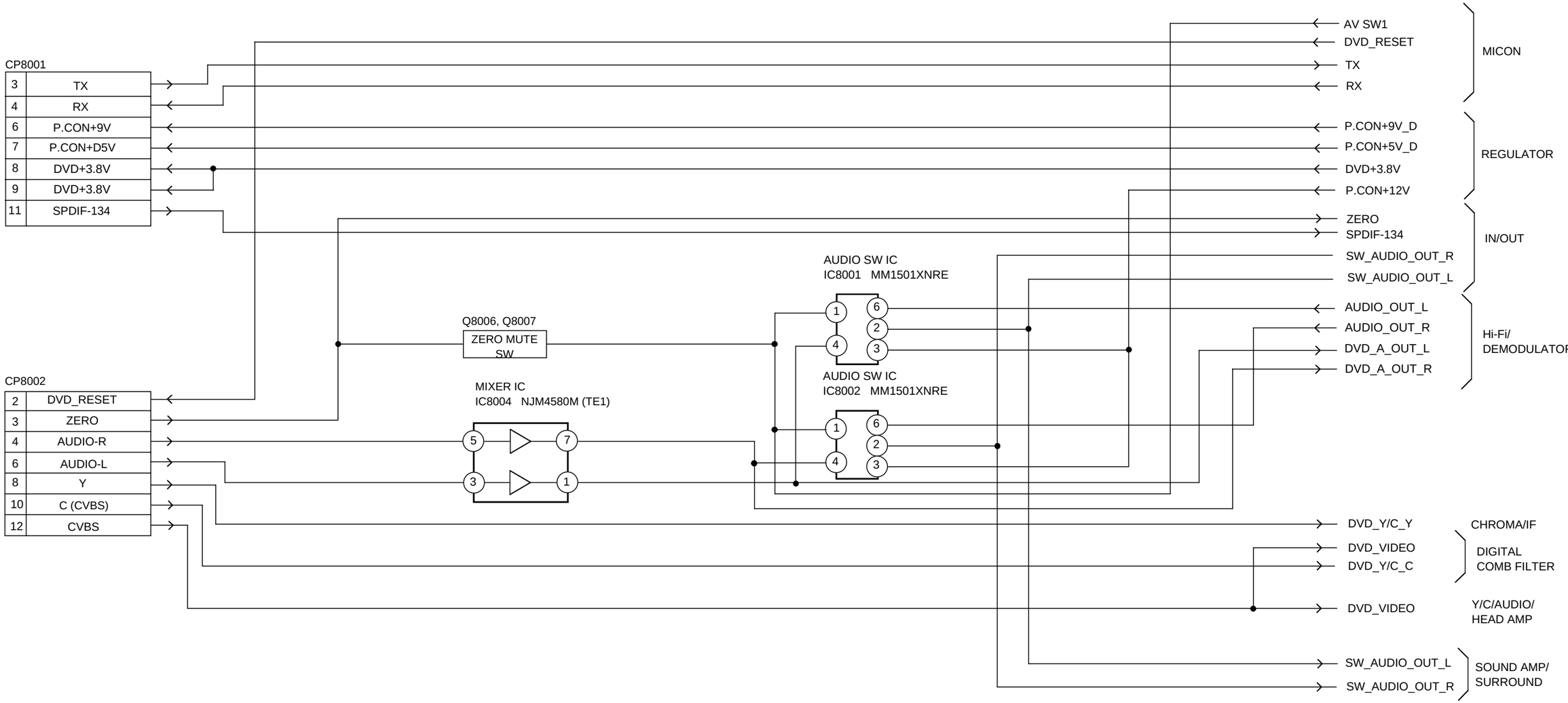

REGULATOR BLOCK DIAGRAM

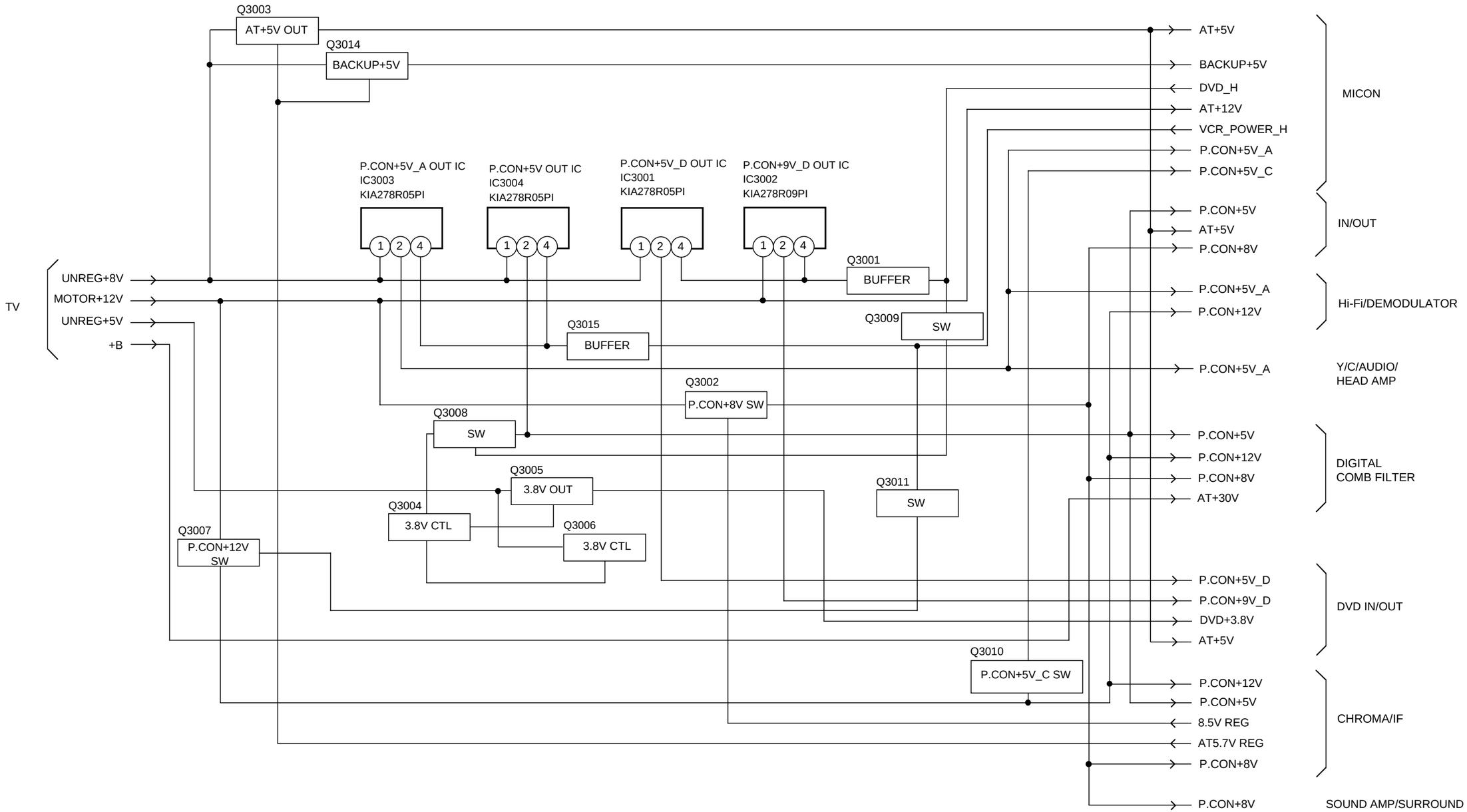

E-21

TV BLOCK DIAGRAM

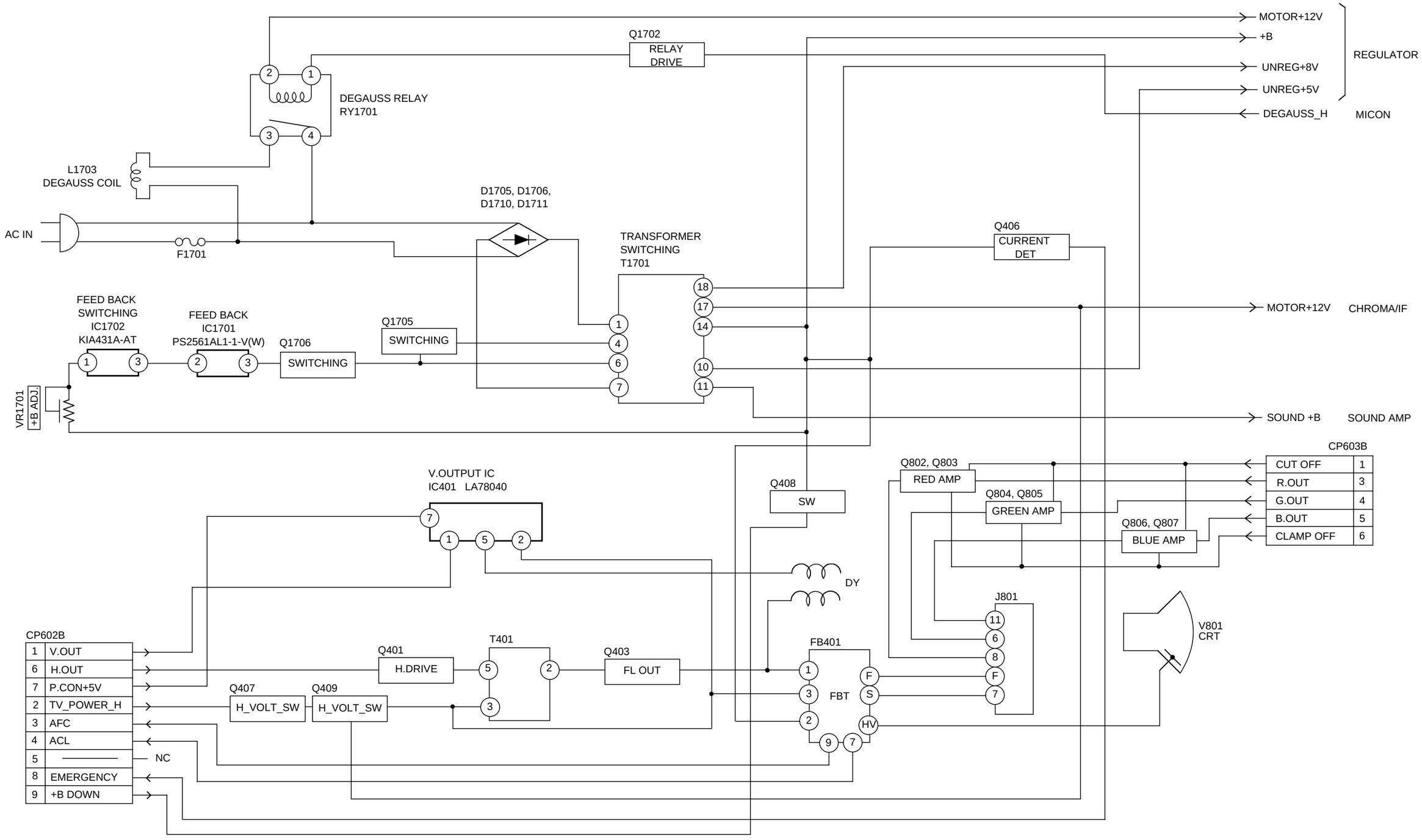

PRINTED CIRCUIT BOARDS

DVD (TOP SIDE)

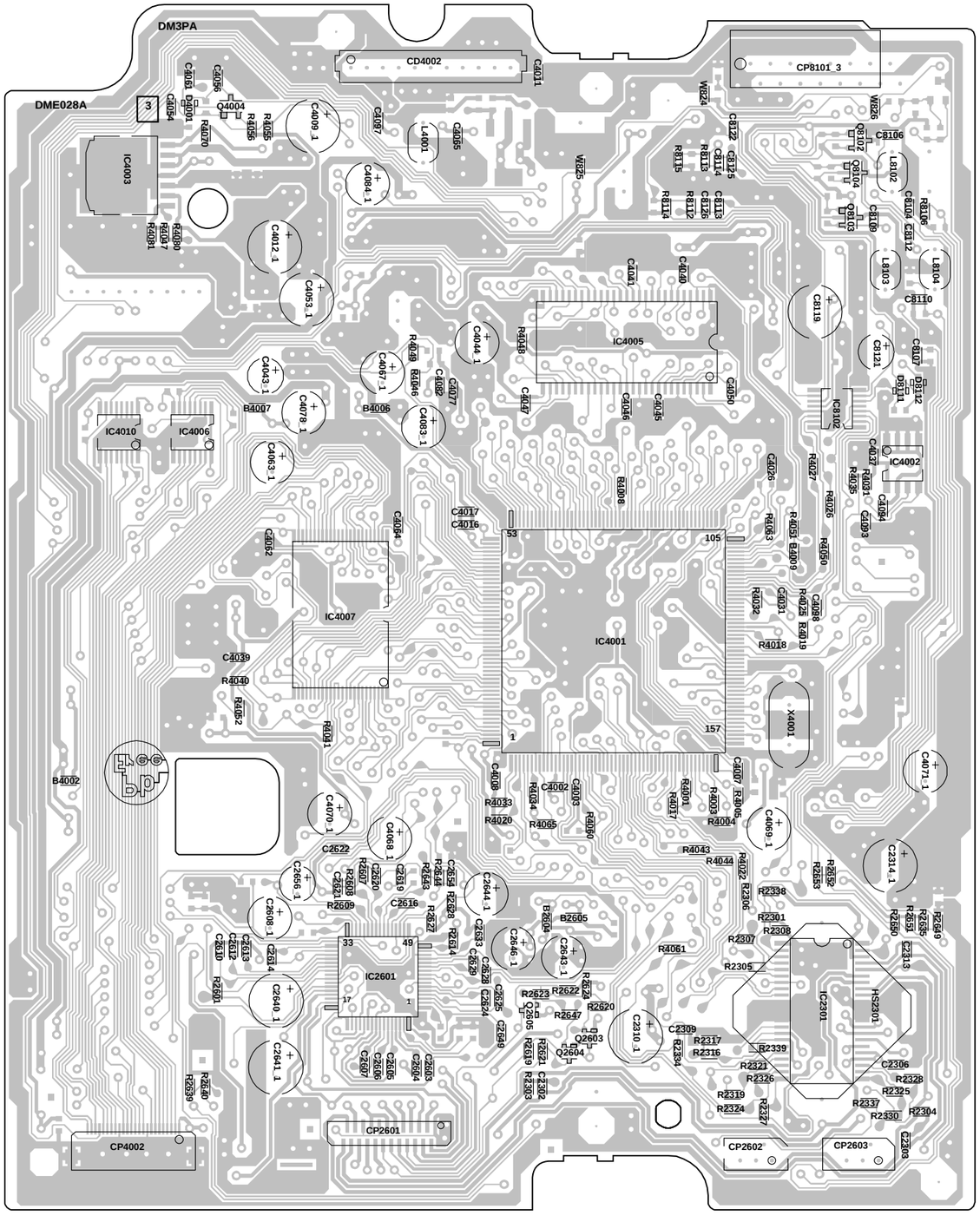

DVD (BOTTOM SIDE)

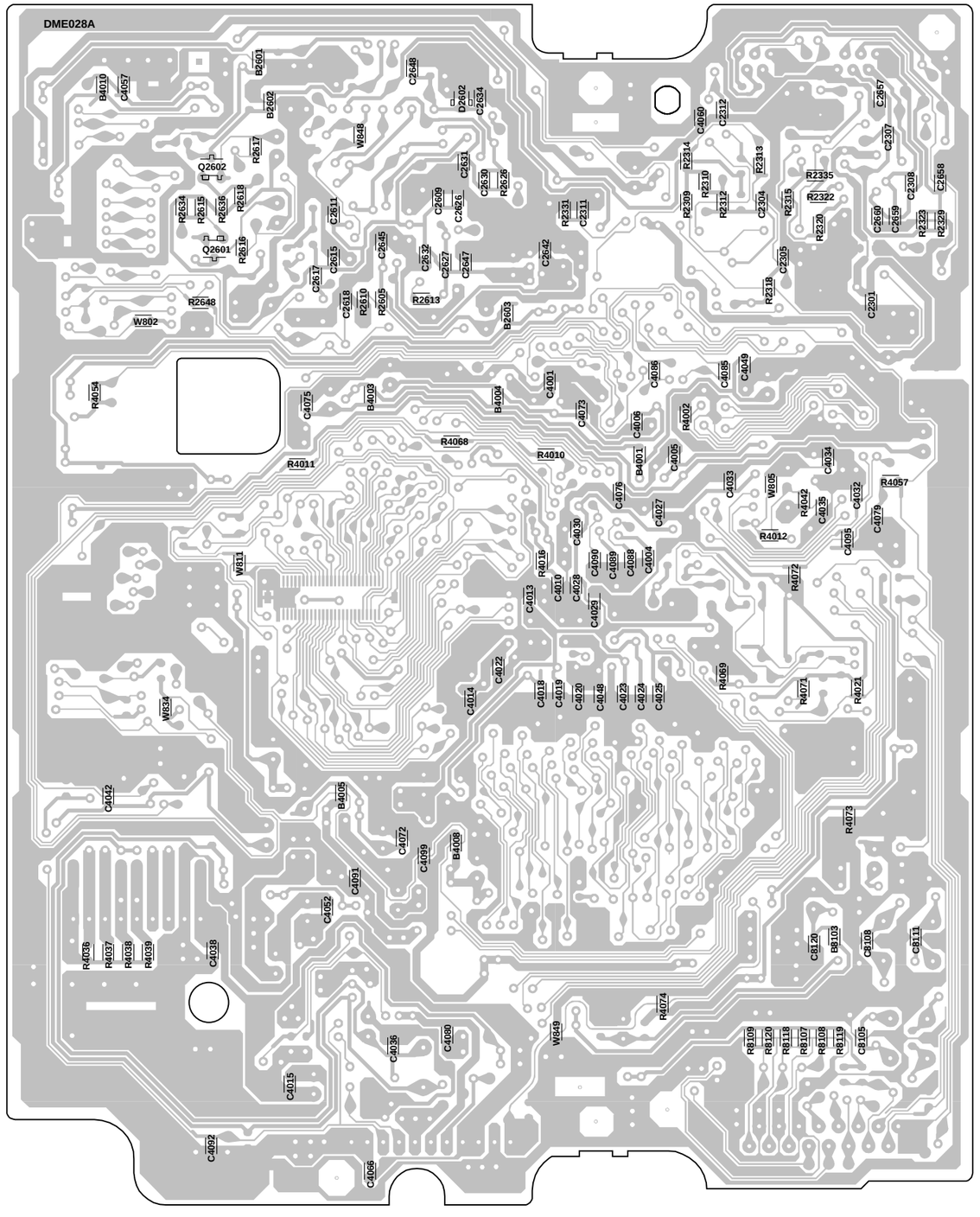

PRINTED CIRCUIT BOARDS
VCR (INSERTED PARTS)
SOLDER SIDE

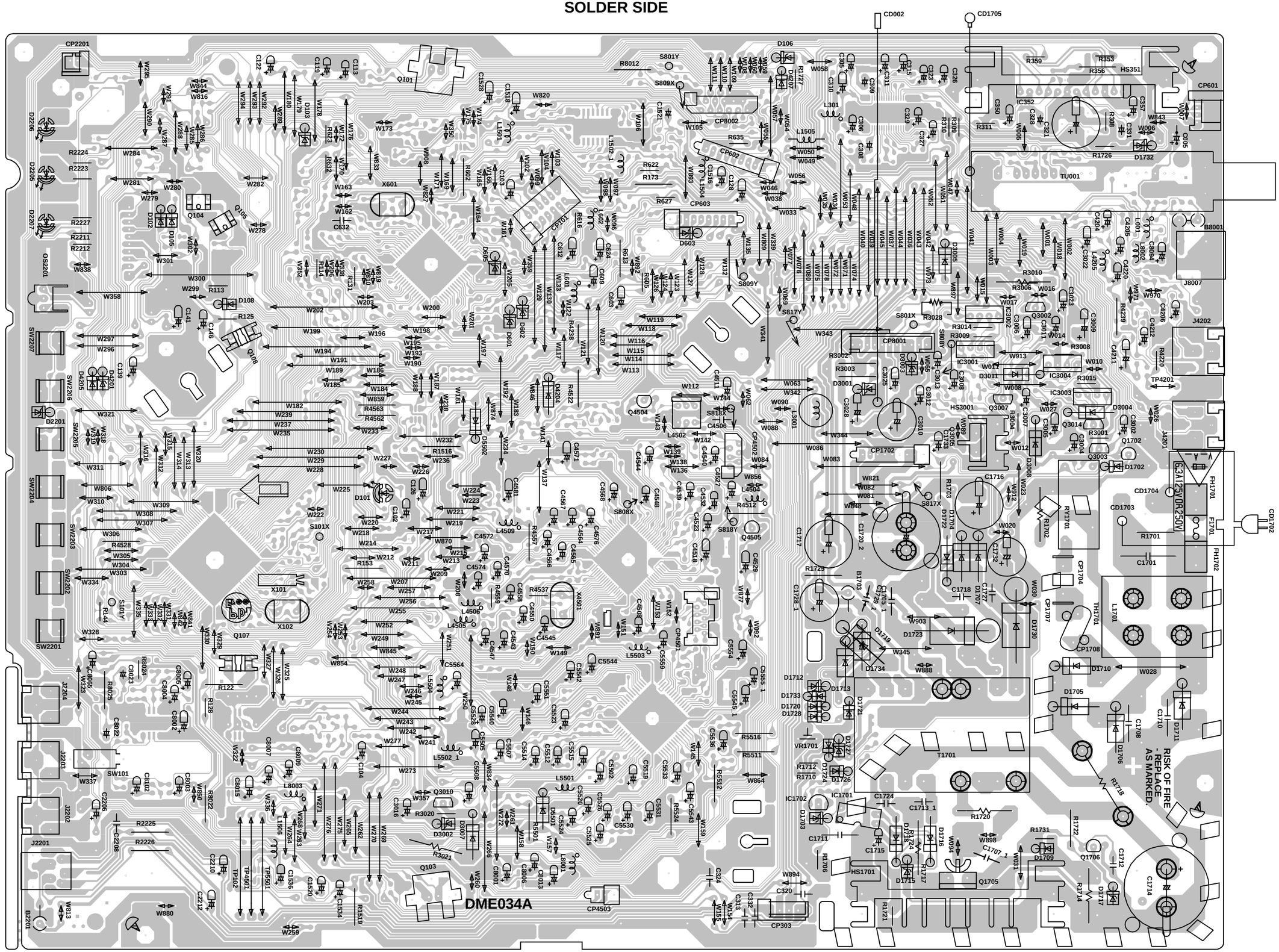

PRINTED CIRCUIT BOARDS
VCR (CHIP MOUNTED PARTS)
SOLDER SIDE

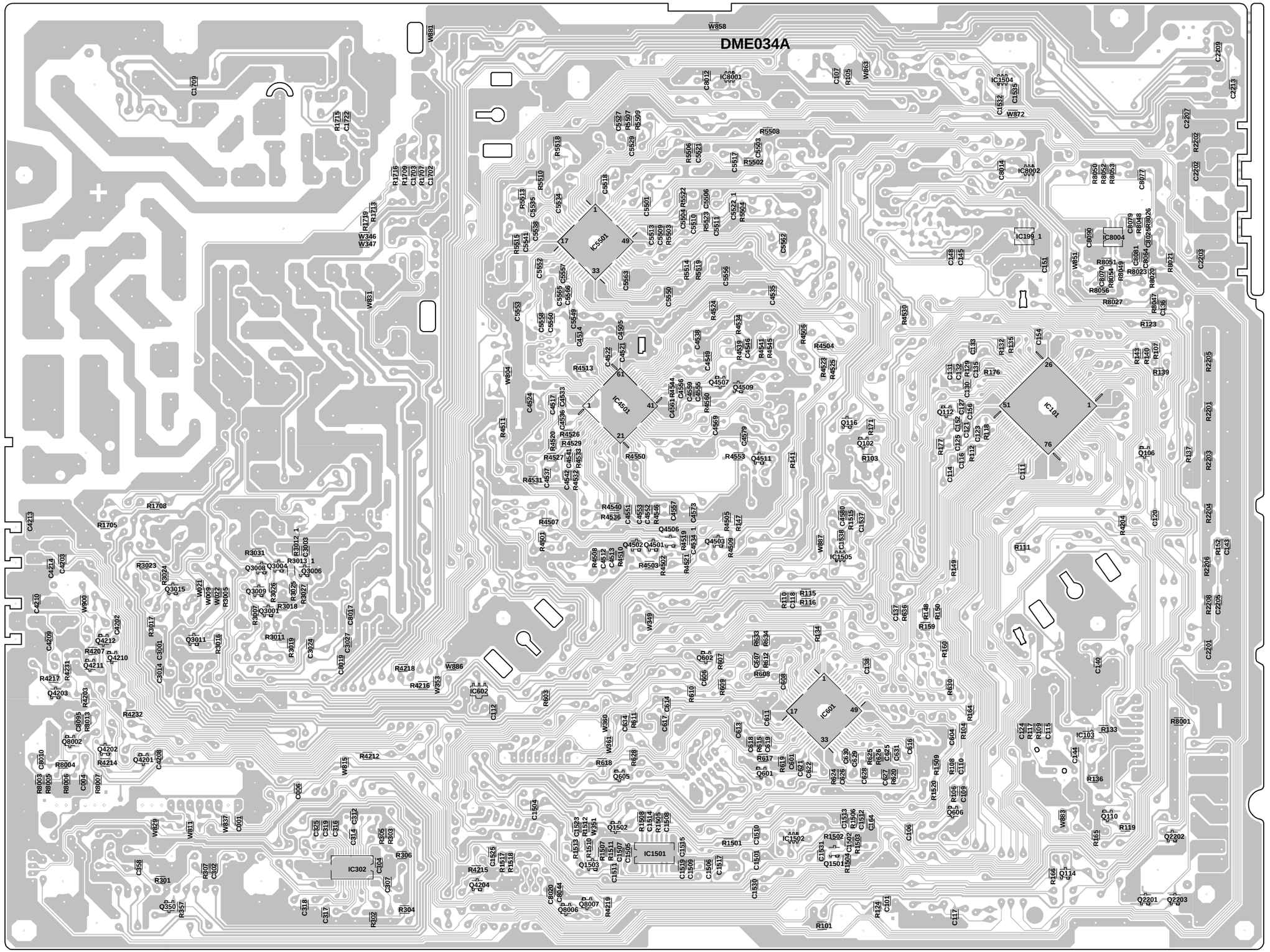

PRINTED CIRCUIT BOARDS
DEFLECTION/CRT/OPERATION
SOLDER SIDE

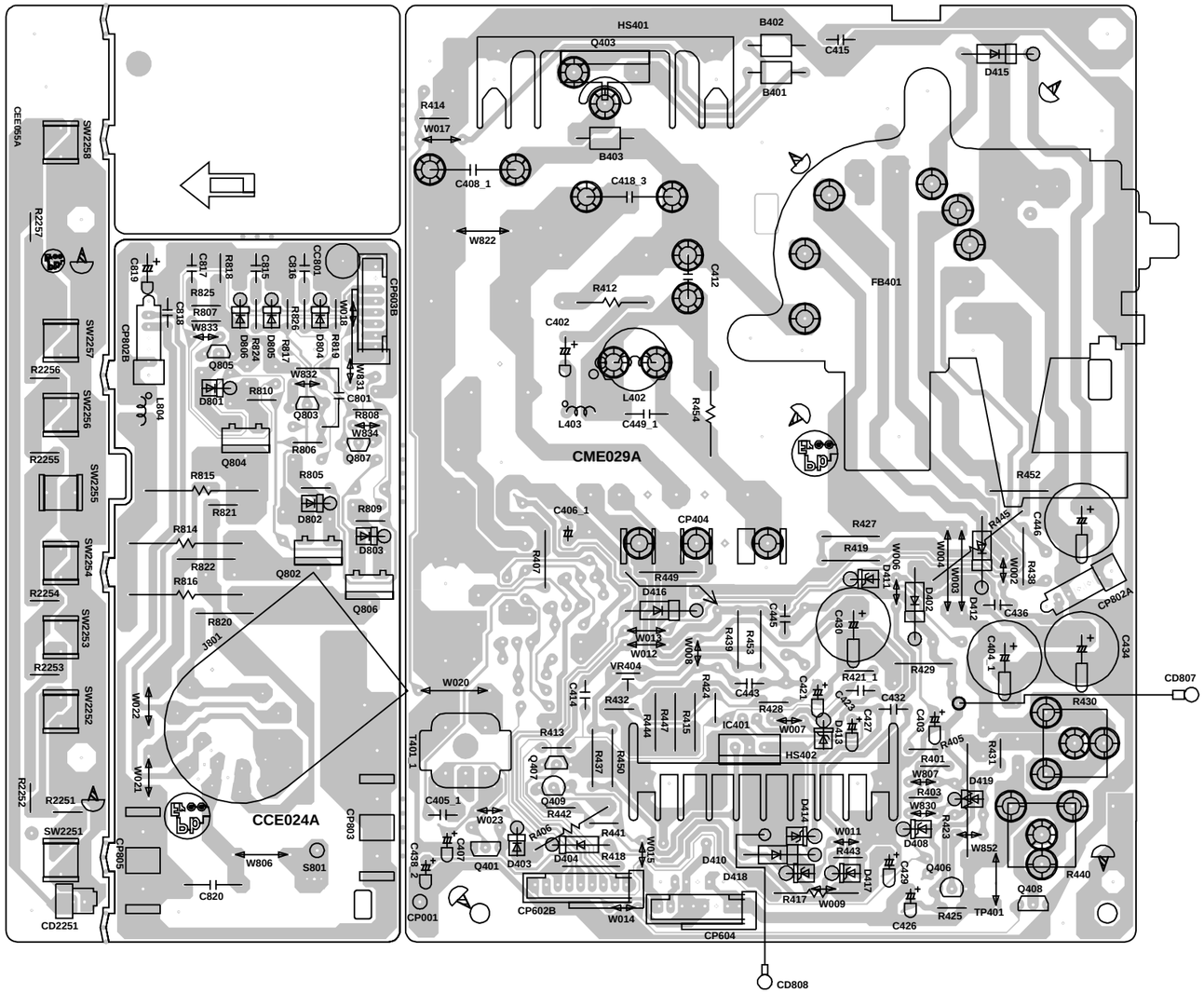

PRINTED CIRCUIT BOARDS

MEMORY CARD (TOP SIDE)

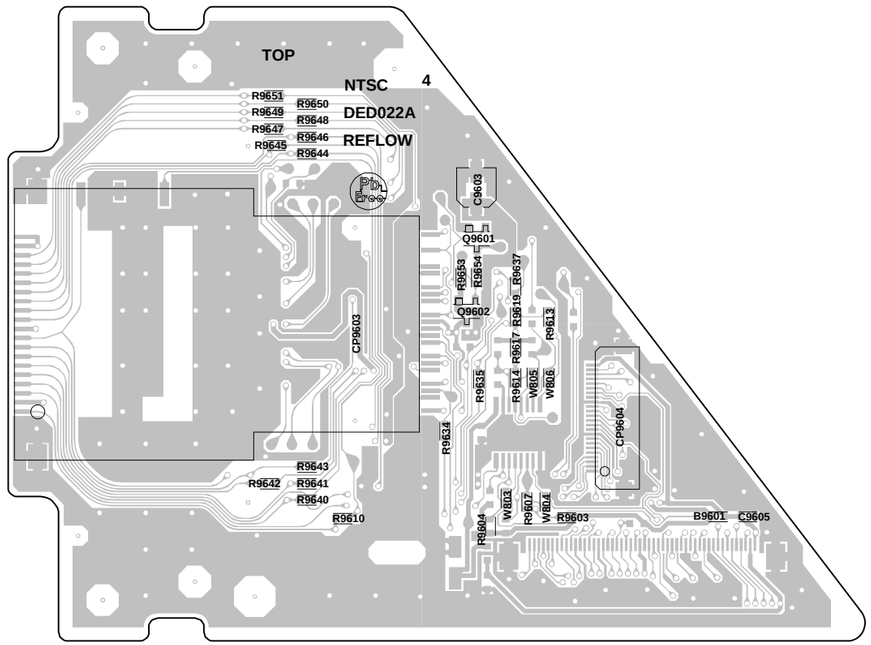

MEMORY CARD (BOTTOM SIDE)

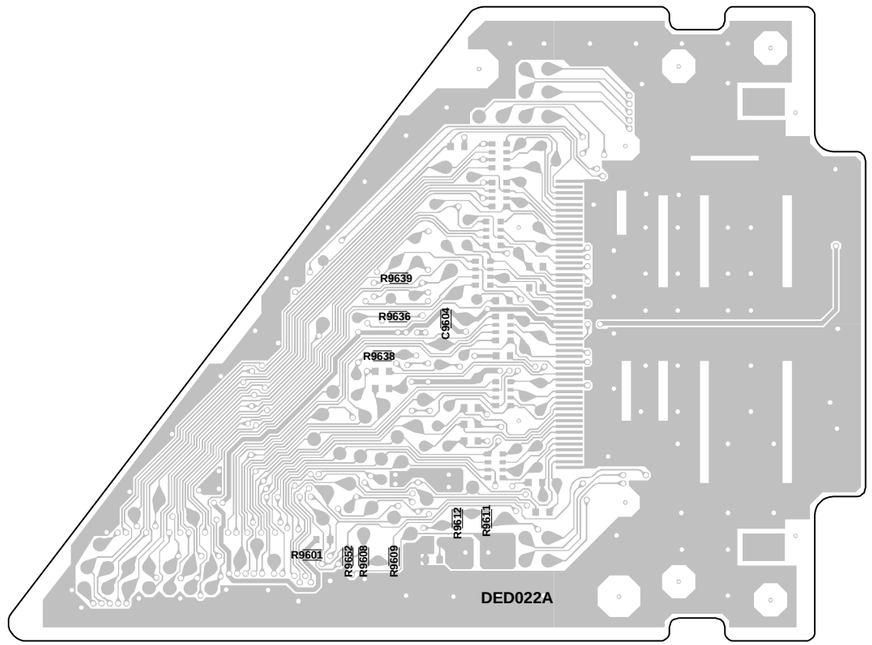

LOADING MOTOR (INSERTED PARTS)
SOLDER SIDE

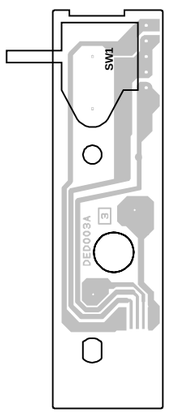

LOADING MOTOR (CHIP MOUNTED PARTS)
SOLDER SIDE

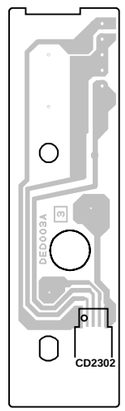

SW
SOLDER SIDE

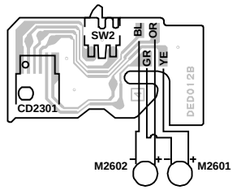

RF AMP/MOTOR DRIVE SCHEMATIC DIAGRAM
(DVD PCB)

DM3P(05SD)

FROM/TO LOADER

CP2601
09-5000-024-001-001

1	GND
2	F
3	Vref
4	VCC
5	E
6	D
7	C
8	SW1(DVD/CD)
9	VRF(RF OUT)
10	B
11	A
12	VR(DVD)
13	VR COM
14	VR(CD)
15	GND
16	LD(CD)
17	PD
18	LD(DVD)
19	GND
20	NC
21	T DRV
22	T RTN
23	F DRV
24	F RTN

CP2602
00_6232_005_006_800+

5	LD-
4	LD+
3	OPEN
2	GND(D)
1	CLOSE

CP2603
00_6232_006_006_800+

6	SW(GND)
5	LIMIT SW
4	SLD-
3	SLD+
2	SP1-
1	SP1+

READ CHANNEL IC
IC2601
ZR36708TQCG

MOTOR DRIVE IC
IC2301
LA6565

FROM/TO MPEG/MICON
TOUT_SW
TIN_SW
RFA_SCLK
AAF_CE
AAF_FE
AAF_TE
AAF_PI
FNN
FNP
VBIASS0
VBIASS1
TRAY_CLOSE
TRAY_OPEN
GND
D_GND
P.CON+5V
P.CON+A5V
P.CON+3.3V
SMUTE
TRACK_DAC
FOCUS_DAC
SPINDLE_PWM
SLED_PWM
ADCIN_7
ADCIN_5
ADCIN_6
VCC+9V
M_GND

FROM/TO MEMORY CARD1
SPDL_SENS
RFA_SDEN
RFA_SDATA
DEFECT
MIRR
HOME
VR_SEL

PCB130
DME028

NOTE:THIS SCHEMATIC DIAGRAM IS THE LATEST AT THE TIME OF PRINTING AND SUBJECT TO CHANGE WITHOUT NOTICE。

NOTE:THE DC VOLTAGE EACH PART WAS MEASURED WITH THE DIGITAL TESTER DURING PLAYBACK.

MPEG/MICON SCHEMATIC DIAGRAM

(DVD PCB)

FROM/TO MEMORY

FROM/TO AUDIO/JACK

FROM/TO RF AMP/MOTOR DRV

FROM/TO DVD IN/OUT

MPEG/MICON IC
IC4001
ZR36778HQCG

REG+3.3V +1.9V IC
IC4003
BA33E00WHFP-TR

EEPROM1C
BR24L02S-WE2
IC4002

W COMBO 330mm
CD4002 (CP8001)
C32B3305

L4002
W5T29X7.5X19

PCB130
DME028

TO MEMORY CARD 1

NOTE:THE DC VOLTAGE EACH PART WAS MEASURED WITH THE DIGITAL TESTER DURING PLAYBACK.

NOTE:THIS SCHEMATIC DIAGRAM IS THE LATEST AT THE TIME OF PRINTING AND SUBJECT TO CHANGE WITHOUT NOTICE。

ATTENTION LES PIECES REPAREES PAR UN ⚠ ETANT DANGEREUSES AN POINT DE VUE SECURITE N'UTILISER QUE CELLS DECRITES DANS LA NOMENCLATURE DES PIECES。

CAUTION SINCE THESE PARTS MARKED BY ⚠ ARE CRITICAL FOR SAFETY,USE ONES DESCRIBED IN PARTS LIST ONLY 。

MEMORY SCHEMATIC DIAGRAM

(DVD PCB)

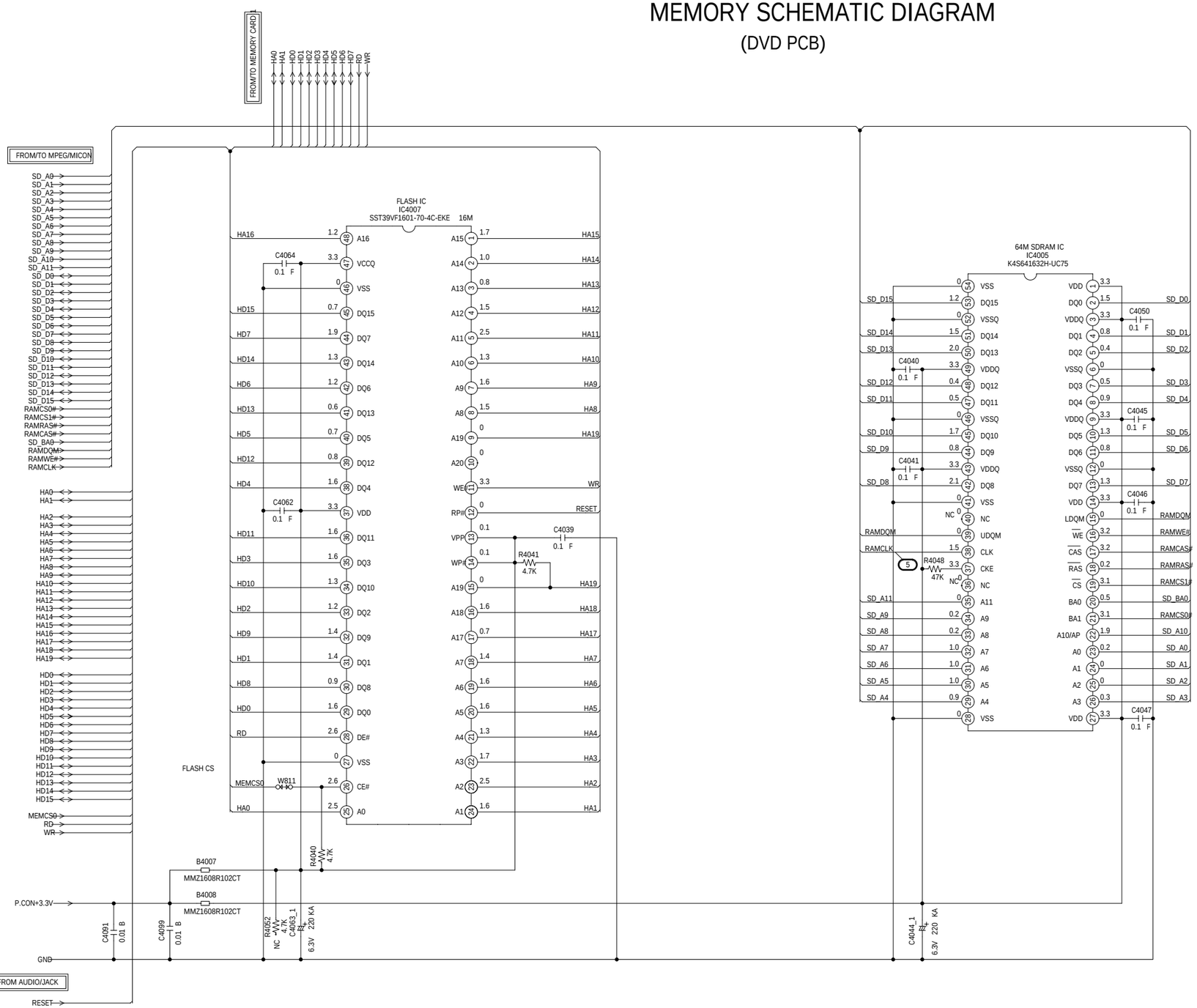

NOTE:THE DC VOLTAGE EACH PART WAS MEASURED WITH THE DIGITAL TESTER DURING PLAYBACK.

NOTE:THIS SCHEMATIC DIAGRAM IS THE LATEST AT THE TIME OF PRINTING AND SUBJECT TO CHANGE WITHOUT NOTICE.

MEMORY CARD1 SCHEMATIC DIAGRAM
(DVD PCB)

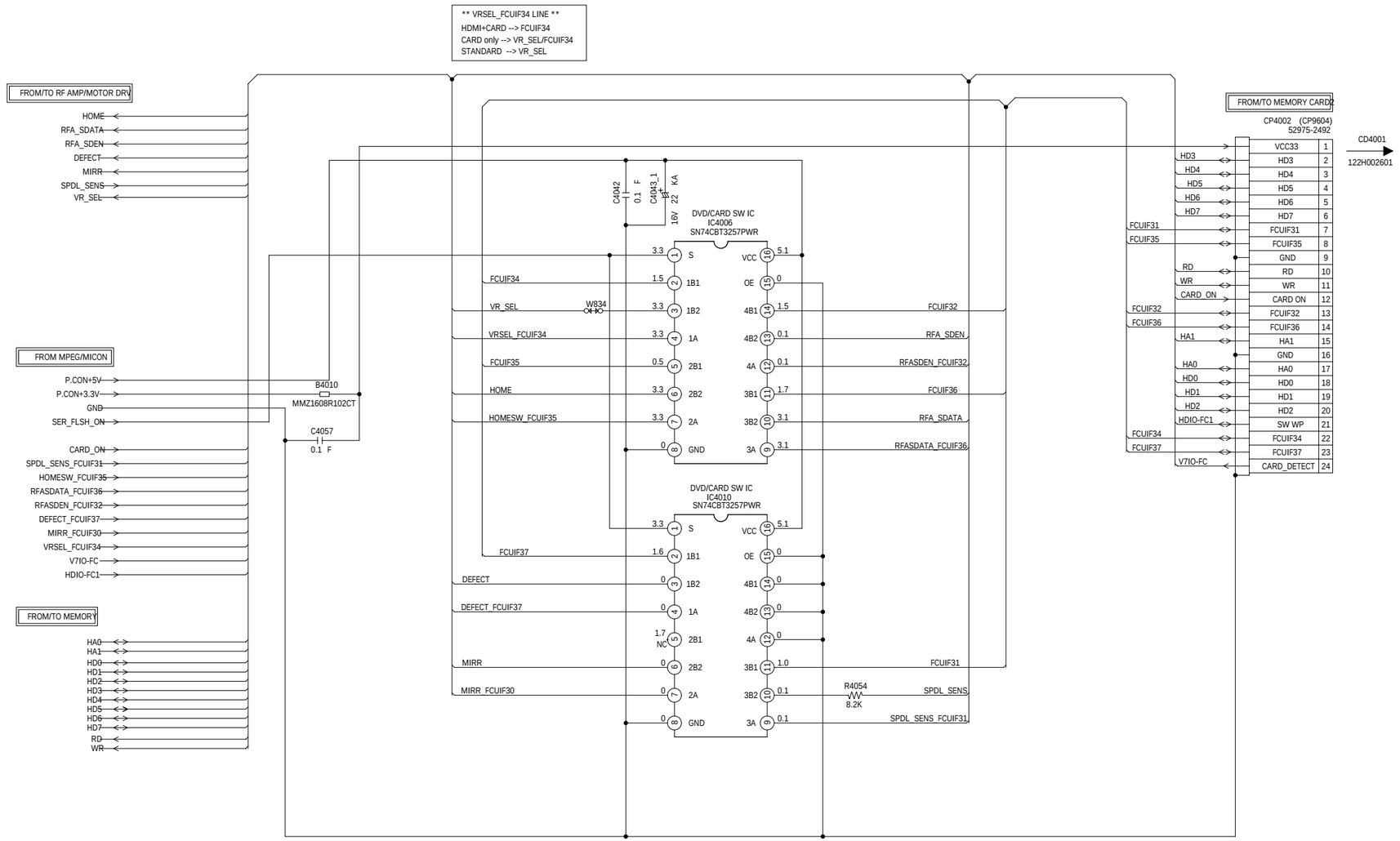

NOTE:THE DC VOLTAGE EACH PART WAS MEASURED WITH THE DIGITAL TESTER DURING PLAYBACK.

NOTE:THIS SCHEMATIC DIAGRAM IS THE LATEST AT THE TIME OF PRINTING AND SUBJECT TO CHANGE WITHOUT NOTICE。

PCB130
DME028

AUDIO/JACK SCHEMATIC DIAGRAM
(DVD PCB)

	1	2	3	4
A	Y	G	CVBS	Y
B	V	R	Y	V
C	U	B	C	U
D	C	CVBS	CVBS	CVBS

FROM/TO MPEG/MICON

P.CON+A5V
DAC_VIDEO_A
DAC_VIDEO_C
DAC_VIDEO_B
DAC_VIDEO_D
P.CON+5V
RESET
I2CDATA/MD
I2CCLK/MC
ML
AMCLK
ABCLK
ALRCLK
ASDATA0
P-H/I-L_RGB-H
V_SW
SYS_MUTE
GND
D GND

R8106 75 +-1%

R8118 470
R8119 470
R8120 470
R8107 470
R8108 470
R8109 470

DAC_C_VIDEO
DAC_B_VIDEO
DAC_D_DVD_VIDEO

C8105 12P CH
C8104 150P CH
C8106 150P CH
L8102 1uH 0305
VIDEO_BUFFER Q8102 KTA1504S_Y_RTK

C8108 12P CH
C8107 150P CH
C8109 150P CH
L8103 1uH 0305
VIDEO_BUFFER Q8103 KTA1504S_Y_RTK

C8111 12P CH
C8110 150P CH
C8112 150P CH
L8104 1uH 0305
VIDEO_BUFFER Q8104 KTA1504S_Y_RTK

TO MEMORY

RESET

B8103 MMZ1608R102CT

C8120 0.1 F
C8119 100 MH7 6.3V

C8114 1 B
C8125 1 B
R8113 470

C8113 1 B
C8126 1 B
R8112 470

R8114 100K
R8115 100K

STEREO DAC IC IC8102 PCM1753DBQR
VOUTR VOUTL VCC VDD DGND LRCK DATA BCK
AGND VCOM ZEROR/ZEROA ZEROL/NA MD MC ML SCK

C8121 10 MH7 16V

ZERO
I2CDATA/MD
I2CCLK/MC
ML
AMCLK
ABCLK
ASDATA0
ALRCLK

P-H/I-L_RGB-H
V_SW
RESET
ZERO
R_AUDIO
L_AUDIO
DAC_B_VIDEO
DAC_C_VIDEO
DAC_D_DVD_VIDEO
SYS_MUTE

D8111 1SS355
D8112 1SS355
C8122 0.001 B

JG025
JG026 NC
JG030
JG033 NC
JG031
JG036
JG034
JG035
JG048
JG037
JG042
JG040
JG038
JG013

W825
W826
W824

FROM/TO DVD IN/OUT

DVD COMBO/W COMBO
CP8101_3 (CP8002)
IMSA-9604S-12F

DVD-H (GND)	12
DVD RESET	11
ZERO	10
AUDIO-R	9
GND	8
AUDIO-L	7
GND	6
Y	5
GND	4
C	3
GND	2
CVBS	1

FFC(1.25mmP)
CD8101
2H0C2204

PCB130
DME028

◀◀ R.SIGNAL+ COMPONENT SIGNAL(U)
≪ B.SIGNAL+ COMPONENT SIGNAL(V)
◀◁ COMPONENT SIGNAL(U)
≪ COMPONENT SIGNAL(V)

⬅ AUDIO SIGNAL(PB)
◀ PLAYBACK LUMINANCE SIGNAL
◁ PLAYBACK COLOR SIGNAL
⋘◁ PLAYBACK VIDEO SIGNAL

NOTE:THE DC VOLTAGE EACH PART WAS MEASURED WITH THE DIGITAL TESTER DURING PLAYBACK.

NOTE: THIS SCHEMATIC DIAGRAM IS THE LATEST AT THE TIME OF PRINTING AND SUBJECT TO CHANGE WITHOUT NOTICE.

Y/C/AUDIO/HEAD AMP SCHEMATIC DIAGRAM

(VCR PCB)

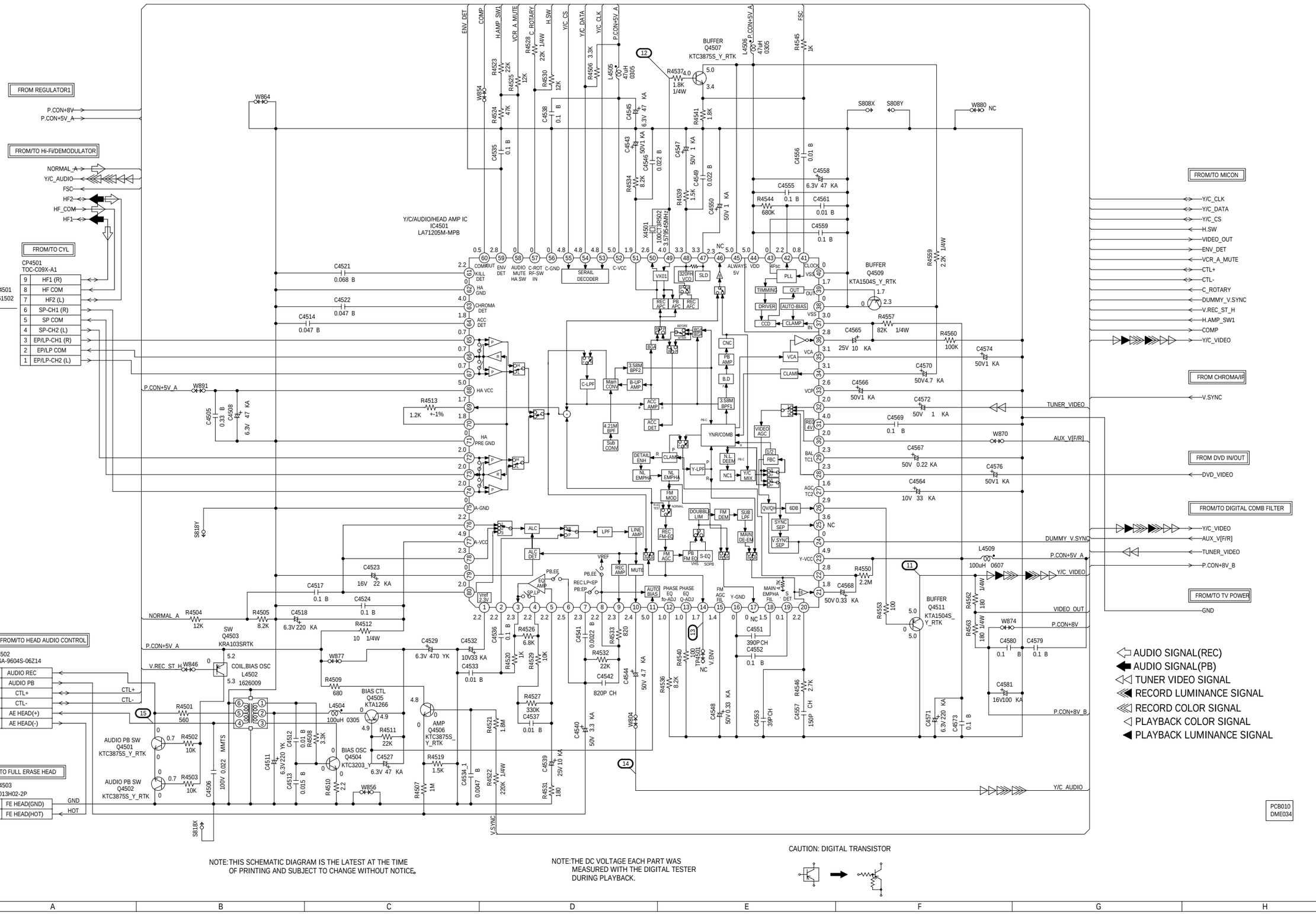

NOTE: THIS SCHEMATIC DIAGRAM IS THE LATEST AT THE TIME OF PRINTING AND SUBJECT TO CHANGE WITHOUT NOTICE.

NOTE: THE DC VOLTAGE EACH PART WAS MEASURED WITH THE DIGITAL TESTER DURING PLAYBACK.

CAUTION: DIGITAL TRANSISTOR

MICON SCHEMATIC DIAGRAM (VCR PCB)

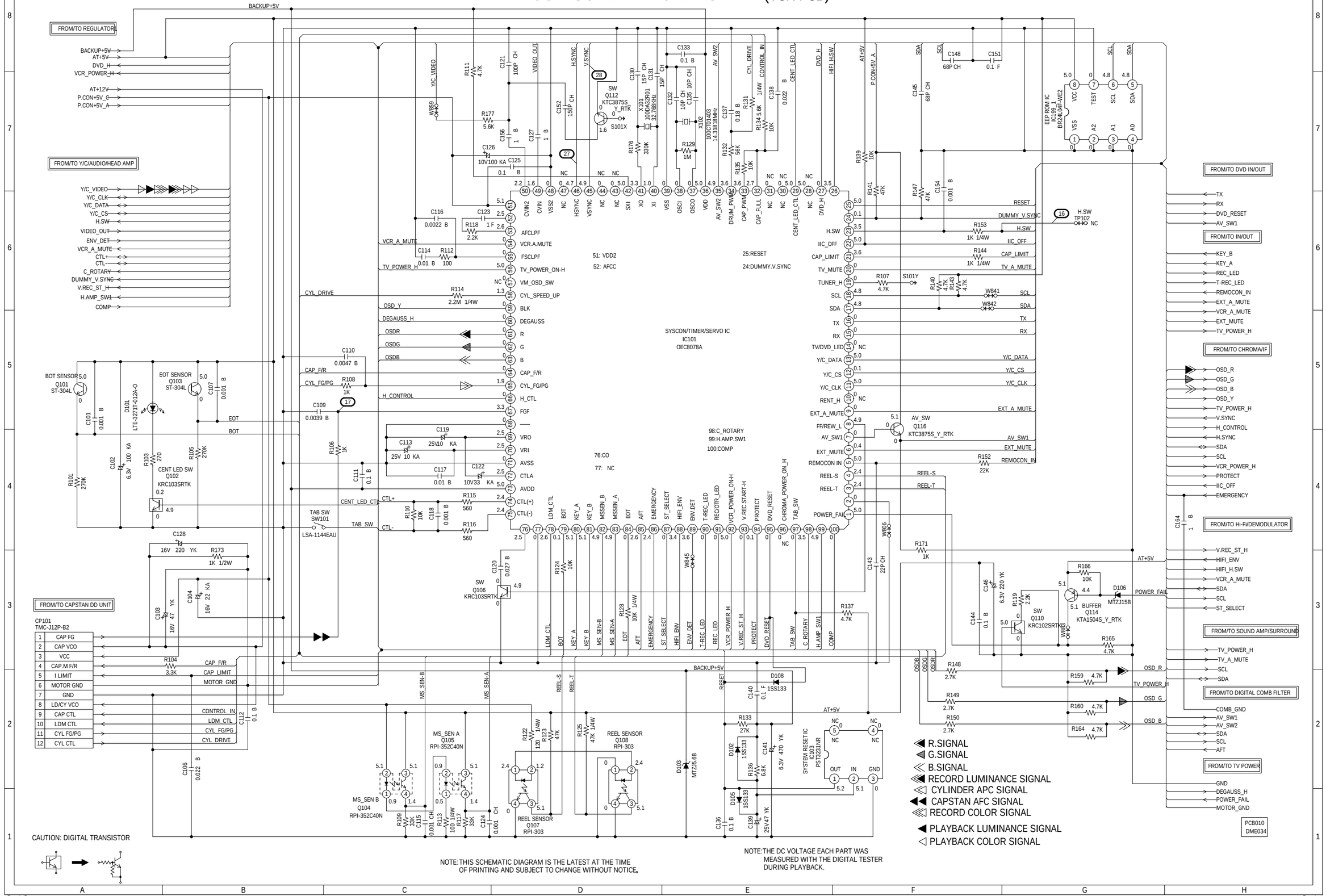

IN/OUT SCHEMATIC DIAGRAM
(VCR PCB)

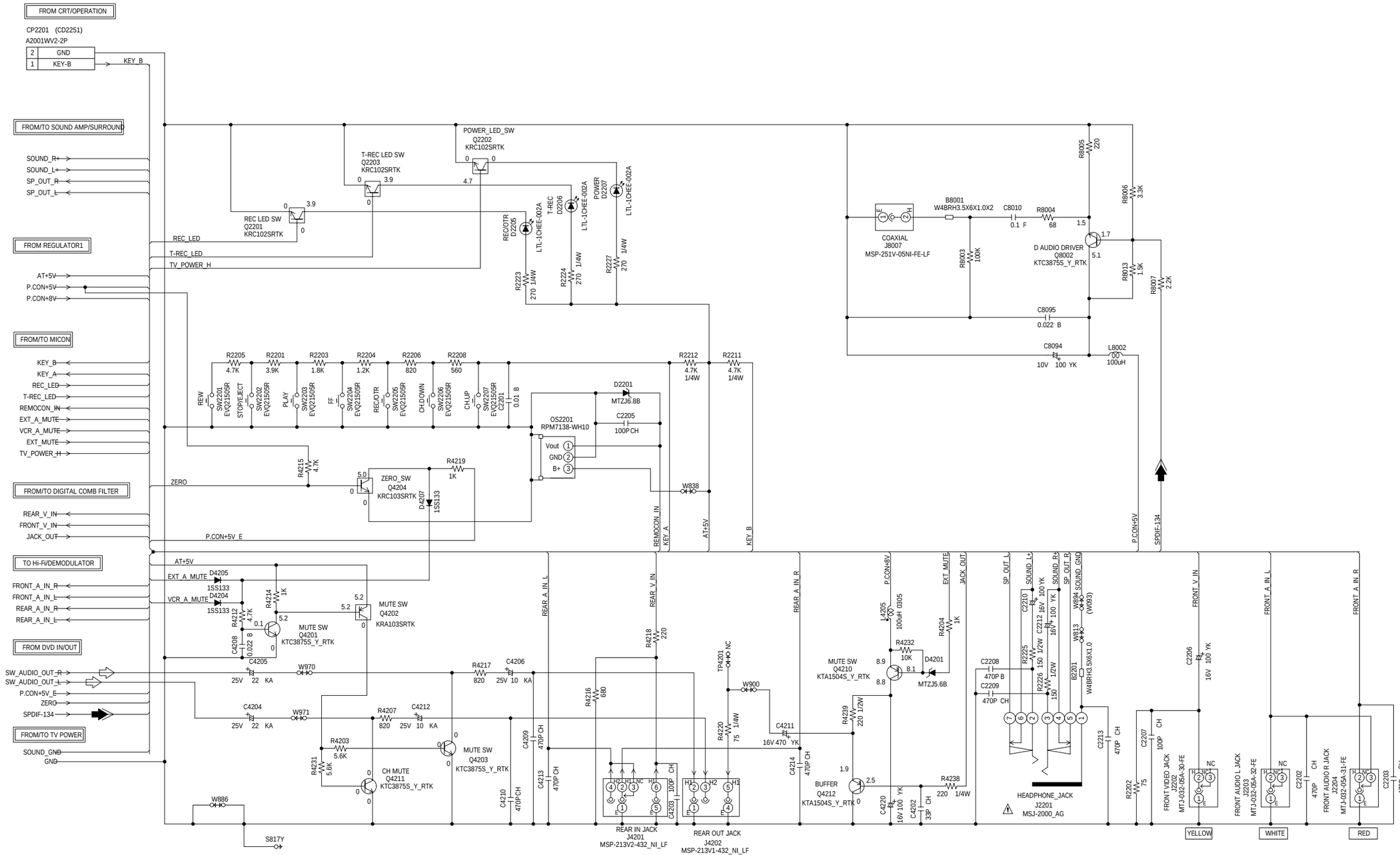

CAUTION SINCE THESE PARTS MARKED BY ⚠ ARE CRITICAL FOR SAFETY,USE ONES DESCRIBED IN PARTS LIST ONLY 。

ATTENTION LES PIECES REPAREES PAR UN ⚠ ETANT DANGEREUSES AN POINT DE VUE SECURITE N'UTILISER QUE CELLS DECRITES DANS LA NOMENCLATURE DES PIECES。

NOTE: THE DC VOLTAGE EACH PART WAS MEASURED WITH THE DIGITAL TESTER DURING PLAYBACK.

NOTE: THIS SCHEMATIC DIAGRAM IS THE LATEST AT THE TIME OF PRINTING AND SUBJECT TO CHANGE WITHOUT NOTICE。

CAUTION: DIGITAL TRANSISTOR

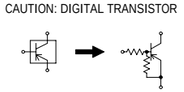

CAUTION: DIGITAL TRANSISTOR

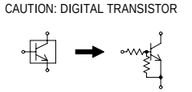

CHROMA/IF SCHEMATIC DIAGRAM

(VCR PCB)

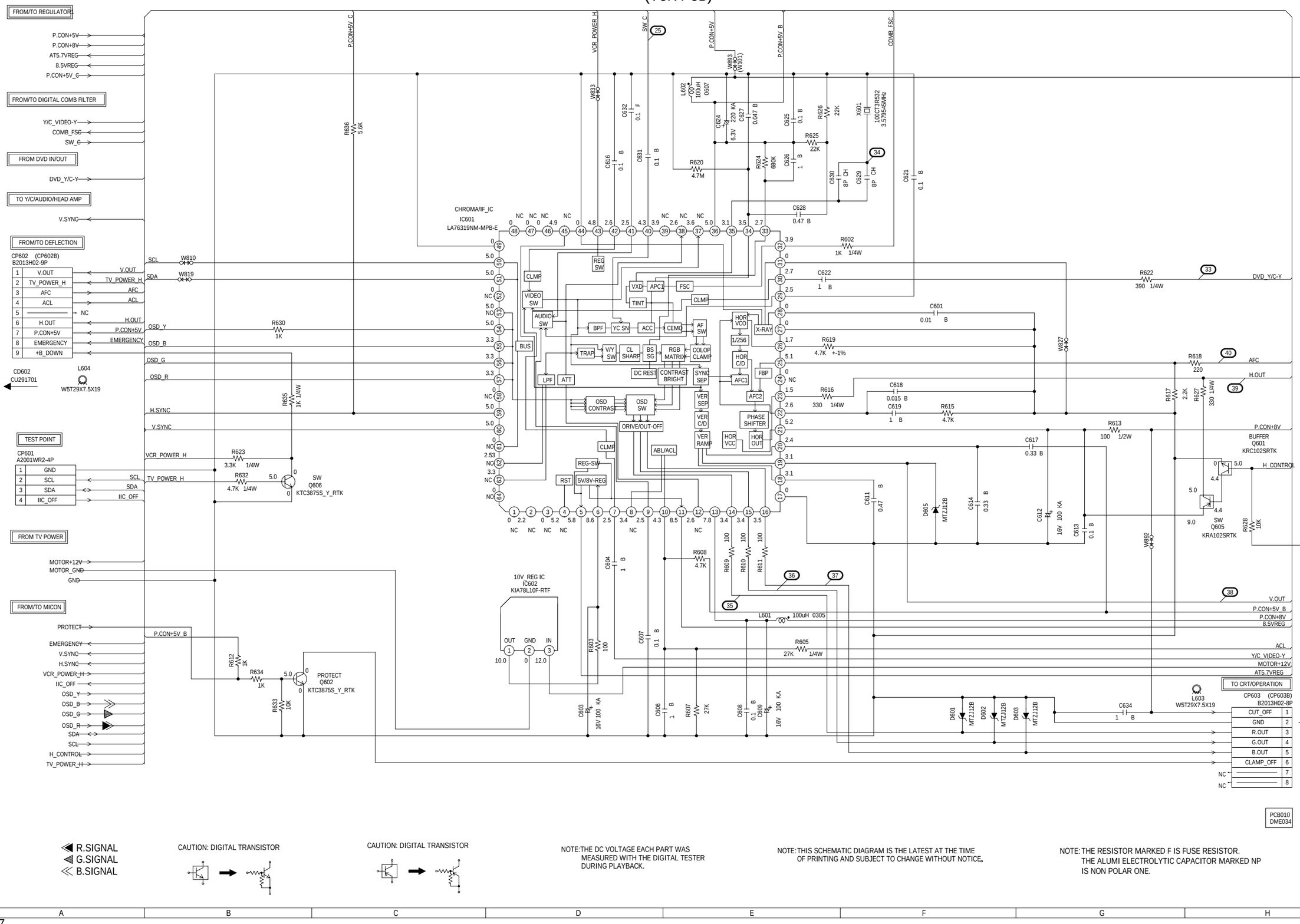

SOUND AMP/SURROUND SCHEMATIC DIAGRAM
(VCR PCB)

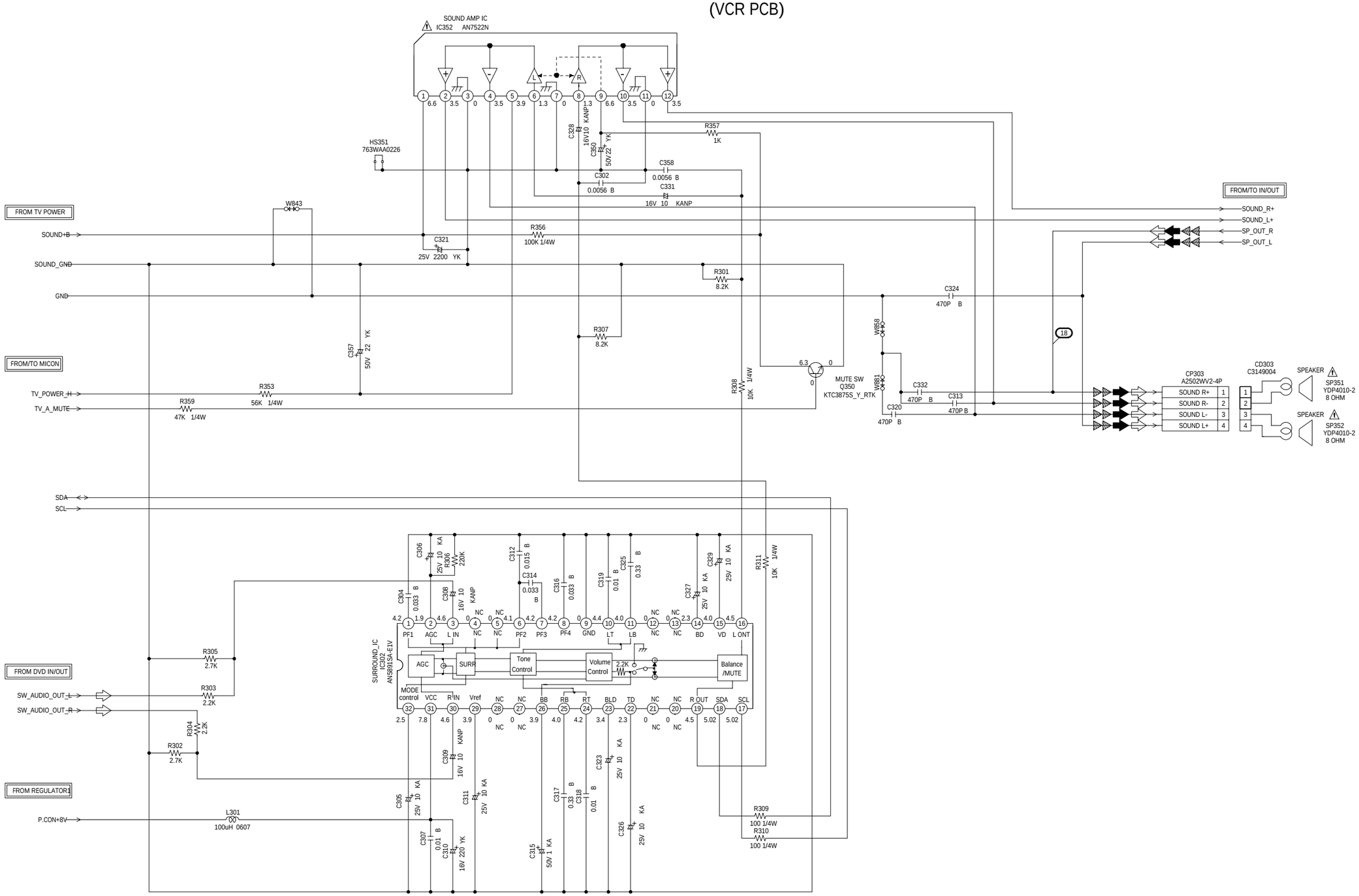

PCB010
DME034

ATTENTION: LES PIECES REPAREES PAR UN ⚠ ETANT DANGEREUSES AN POINT DE VUE SECURITE N'UTILISER QUE CELLS DECRITES DANS LA NOMENCLATURE DES PIECES.

CAUTION: SINCE THESE PARTS MARKED BY ⚠ ARE CRITICAL FOR SAFETY,USE ONES DESCRIBED IN PARTS LIST ONLY .

NOTE: THIS SCHEMATIC DIAGRAM IS THE LATEST AT THE TIME OF PRINTING AND SUBJECT TO CHANGE WITHOUT NOTICE.

NOTE: THE DC VOLTAGE EACH PART WAS MEASURED WITH THE DIGITAL TESTER DURING PLAYBACK.

TUNER AUDIO SIGNAL
AUDIO SIGNAL(REC)
AUDIO SIGNAL(PB)

Hi-Fi/DEMODULATOR SCHEMATIC DIAGRAM

(VCR PCB)

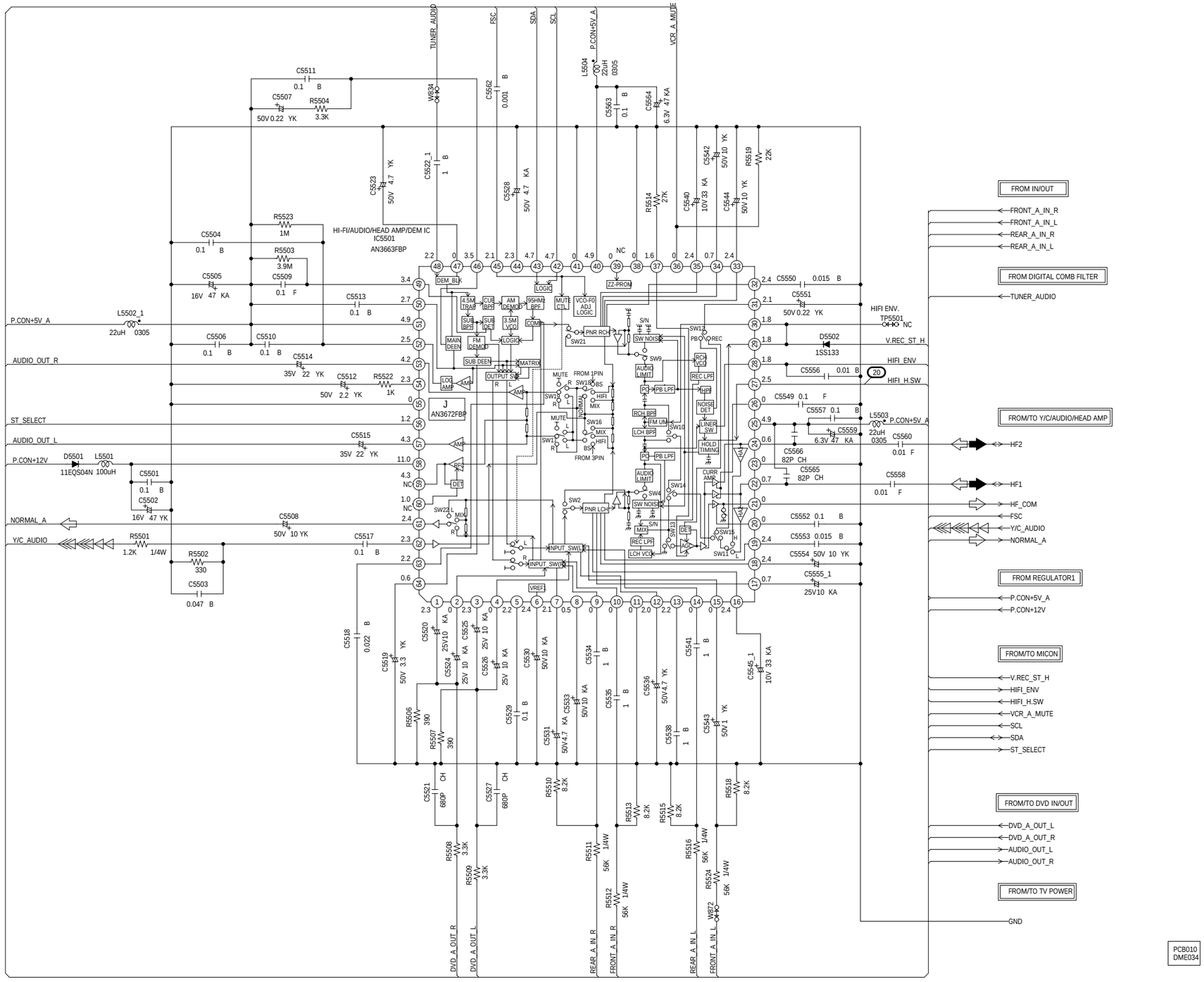

NOTE:THE DC VOLTAGE EACH PART WAS MEASURED WITH THE DIGITAL TESTER DURING PLAYBACK.

NOTE:THIS SCHEMATIC DIAGRAM IS THE LATEST AT THE TIME OF PRINTING AND SUBJECT TO CHANGE WITHOUT NOTICE.

AUDIO SIGNAL(REC)
AUDIO SIGNAL(PB)
TUNER VIDEO SIGNAL
RECORD COLOR SIGNAL

DIGITAL COMB FILTER SCHEMATIC DIAGRAM

(VCR PCB)

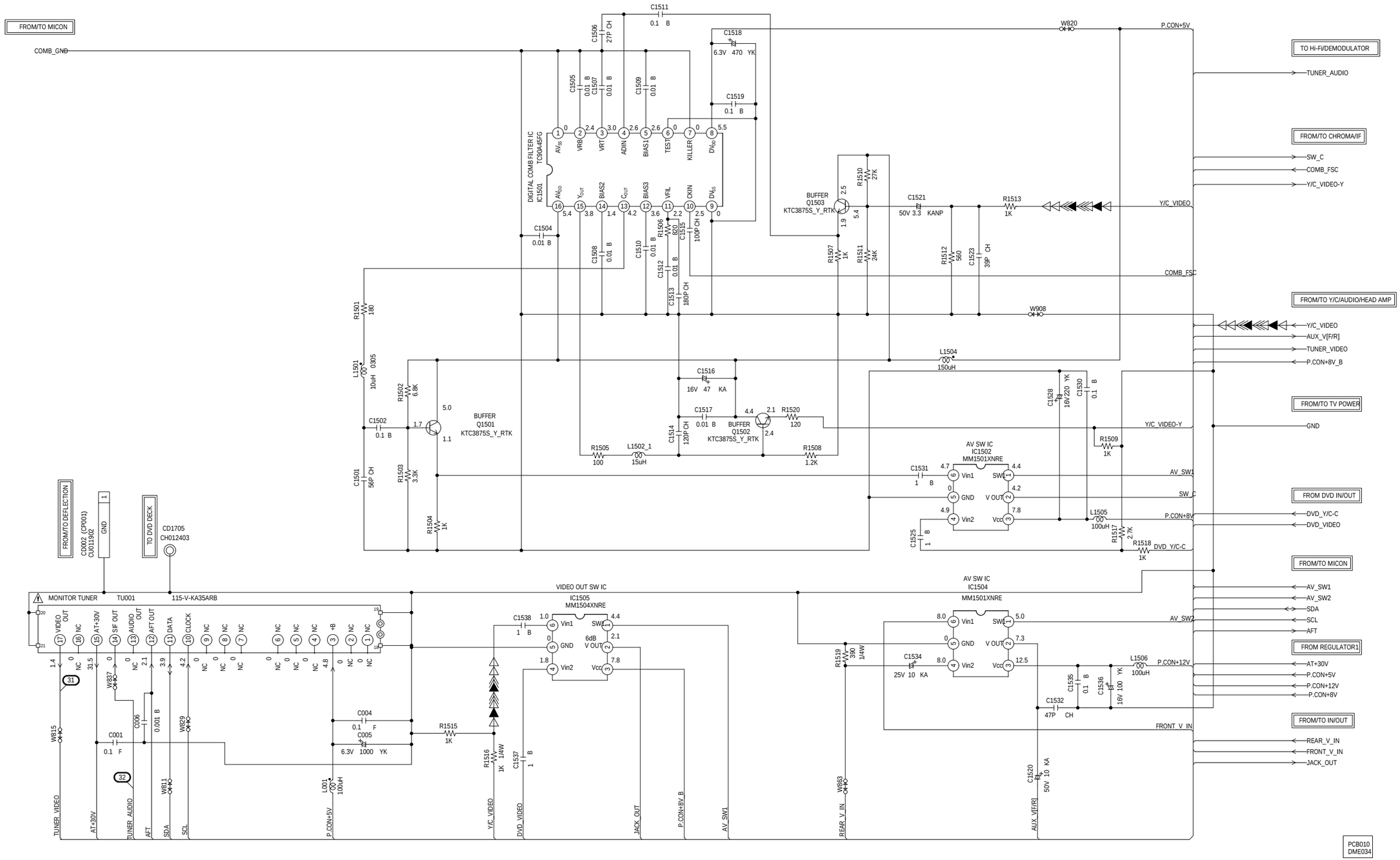

CAUTION: SINCE THESE PARTS MARKED BY ⚠ ARE CRITICAL FOR SAFETY,USE ONES DESCRIBED IN PARTS LIST ONLY 。

ATTENTION: LES PIECES REPAREES PAR UN ⚠ ETANT DANGEREUSES AN POINT DE VUE SECURITE N'UTILISER QUE CELLS DECRITES DANS LA NOMENCLATURE DES PIECES。

NOTE:THIS SCHEMATIC DIAGRAM IS THE LATEST AT THE TIME OF PRINTING AND SUBJECT TO CHANGE WITHOUT NOTICE。

NOTE:THE DC VOLTAGE EACH PART WAS MEASURED WITH THE DIGITAL TESTER DURING PLAYBACK.

◀◀◀ RECORD LUMINANCE SIGNAL
◁◁◁ RECORD COLOR SIGNAL
◁ PLAYBACK COLOR SIGNAL
◀ PLAYBACK LUMINANCE SIGNAL
◁◁ TUNER VIDEO SIGNAL

DVD IN/OUT SCHEMATIC DIAGRAM

(VCR PCB)

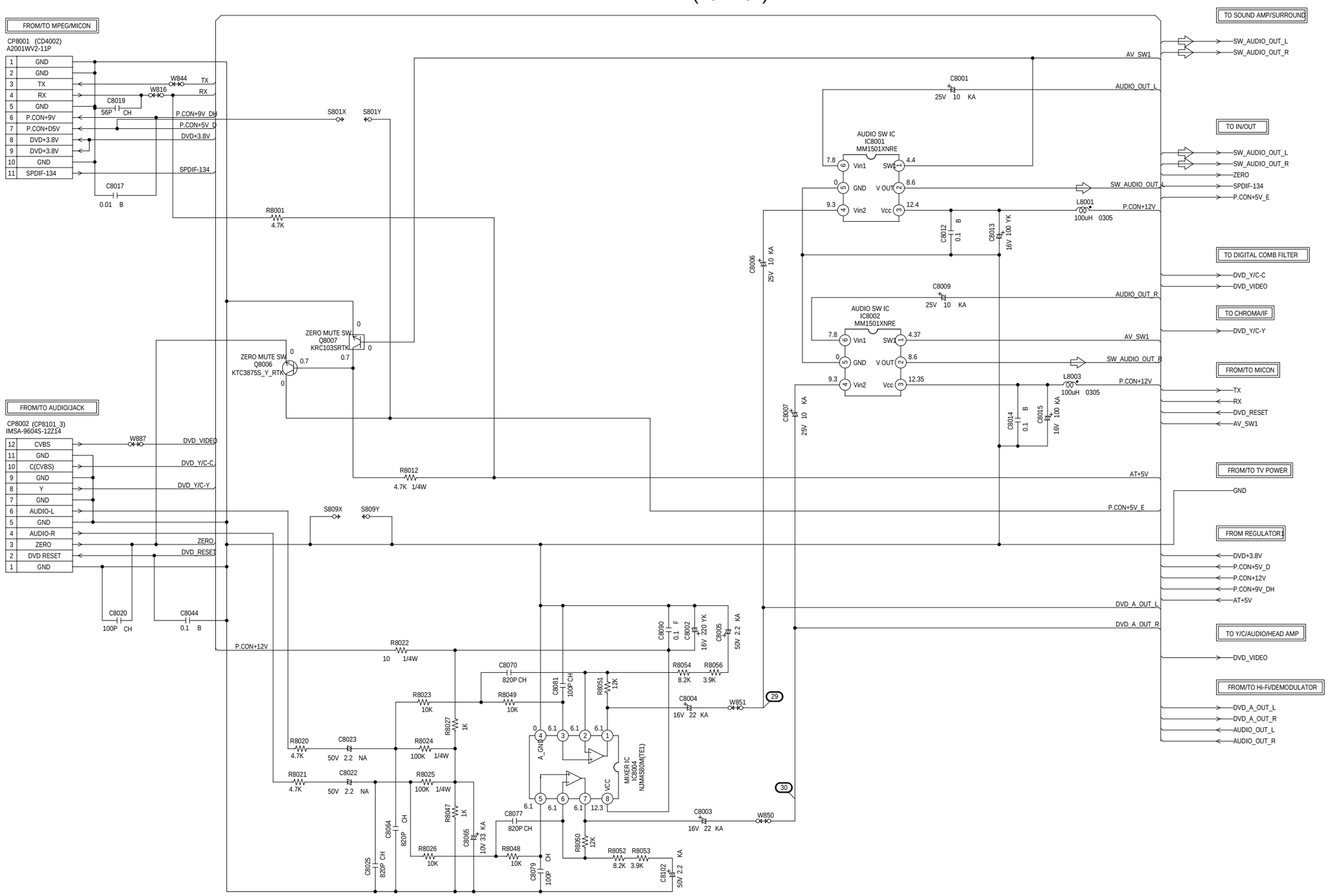

CAUTION: DIGITAL TRANSISTOR

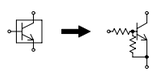

NOTE: THE RESISTOR MARKED F IS FUSE RESISTOR.
THE ALUMI ELECTROLYTIC CAPACITOR MARKED NP IS NON POLAR ONE.

NOTE: THE DC VOLTAGE EACH PART WAS MEASURED WITH THE DIGITAL TESTER DURING PLAYBACK.

NOTE: THIS SCHEMATIC DIAGRAM IS THE LATEST AT THE TIME OF PRINTING AND SUBJECT TO CHANGE WITHOUT NOTICE.

⇦ AUDIO SIGNAL(REC)

REGULATOR1 SCHEMATIC DIAGRAM

(VCR PCB)

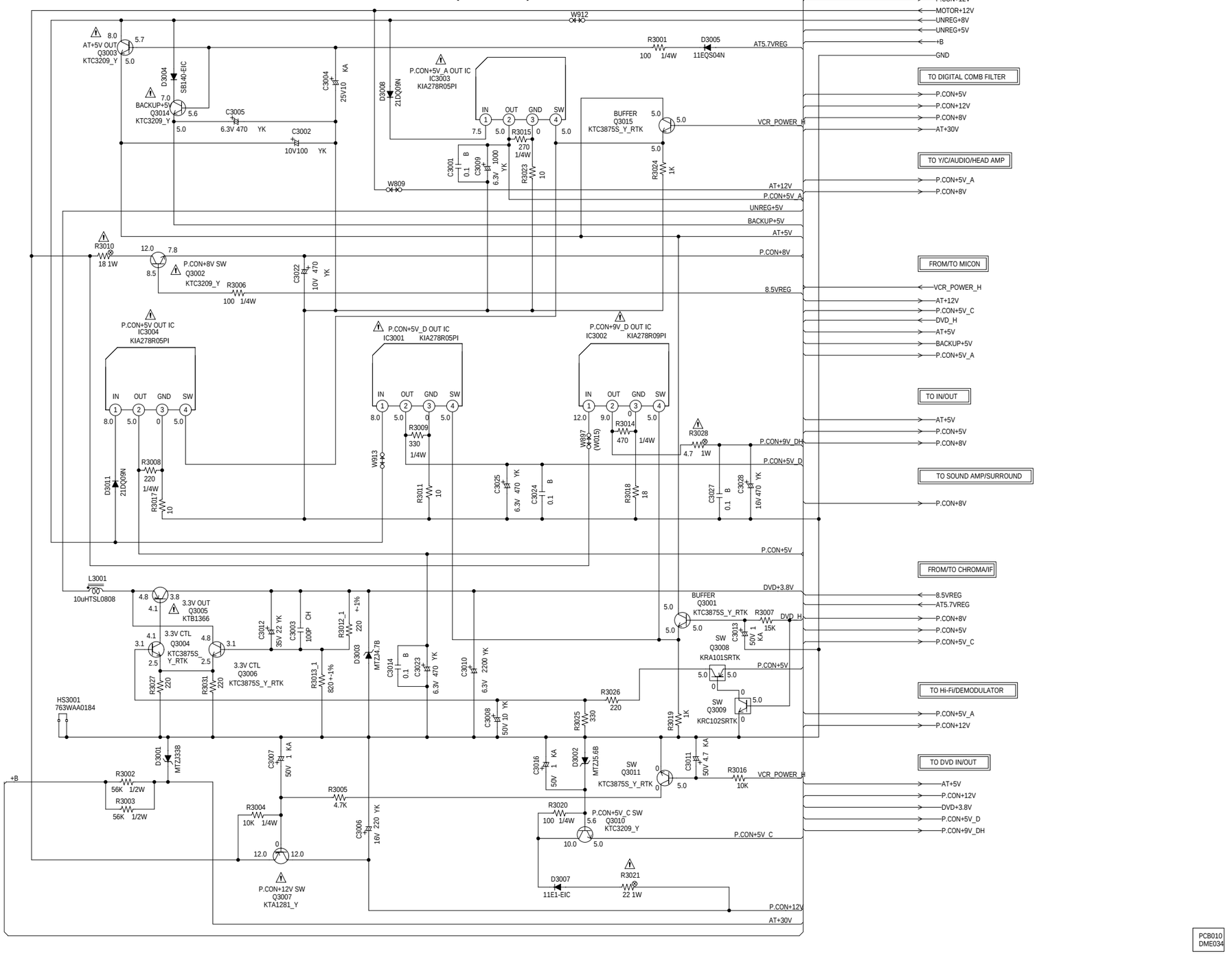

NOTE:THE DC VOLTAGE EACH PART WAS MEASURED WITH THE DIGITAL TESTER DURING PLAYBACK.

NOTE:THIS SCHEMATIC DIAGRAM IS THE LATEST AT THE TIME OF PRINTING AND SUBJECT TO CHANGE WITHOUT NOTICE.

ATTENTION: LES PIECES REPAREES PAR UN ⚠ ETANT DANGEREUSES AN POINT DE VUE SECURITE N'UTILISER QUE CELLS DECRITES DANS LA NOMENCLATURE DES PIECES.

CAUTION: SINCE THESE PARTS MARKED BY ⚠ ARE CRITICAL FOR SAFETY,USE ONES DESCRIBED IN PARTS LIST ONLY 。

CAUTION: DIGITAL TRANSISTOR

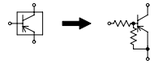

CAUTION: DIGITAL TRANSISTOR

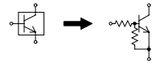

TV POWER SCHEMATIC DIAGRAM

(VCR PCB)

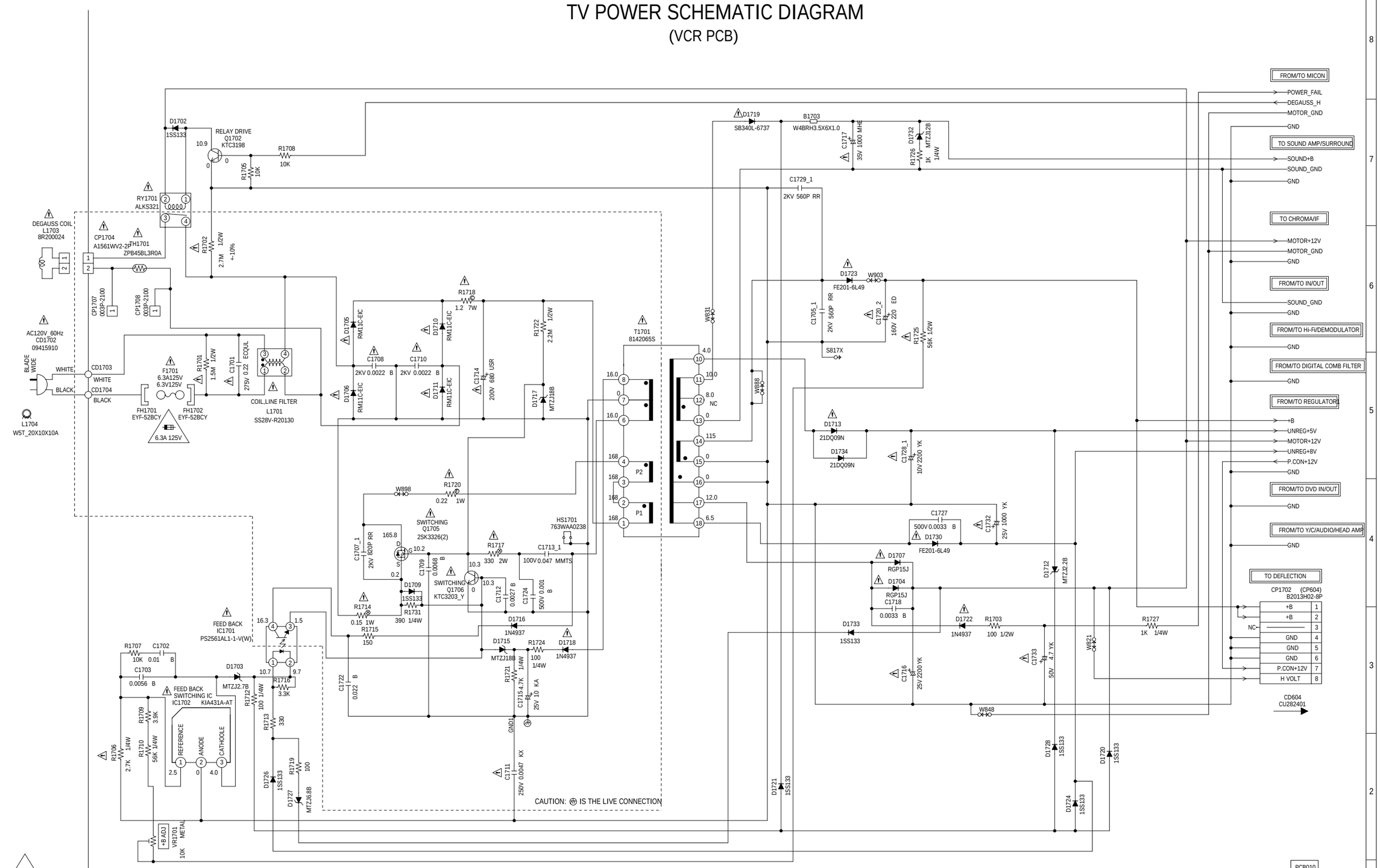

6.3A 125V

CAUTION: FOR CONTINUED PROTECTION AGAINST FIRE HAZARD, REPLACE ONLY WITH THE SAME TYPE FUSE 6.3A 125V (F1701)

ATTENTION: POUR UNE PROTECTION CONTINUE LES RISQUES D'INCEIE N'UTILISER QUE DES FUSIBLE DE MEME TYPE 6.3A 125V (F1701)

NOTE: THIS SCHEMATIC DIAGRAM IS THE LATEST AT THE TIME OF PRINTING AND SUBJECT TO CHANGE WITHOUT NOTICE.

NOTE: THE DC VOLTAGE AT EACH PART WAS MEASURED WITH THE DIGITAL TESTER WHEN THE COLOR BROADCAST WAS RECEIVED IN GOOD CONDITION AND PICTURE IS NORMAL.

CAUTION: SINCE THESE PARTS MARKED BY ⚠ ARE CRITICAL FOR SAFETY, USE ONES DESCRIBED IN PARTS LIST ONLY.

ATTENTION: LES PIECES REPAREES PAR UN ⚠ ETANT DANGEREUSES AN POINT DE VUE SECURITE N'UTILISER QUE CELLS DECRITES DANS LA NOMENCLATURE DES PIECES.

NOTE: THE RESISTOR MARKED F IS FUSE RESISTOR. THE ALUMI ELECTROLYTIC CAPACITOR MARKED NP IS NON POLAR ONE.

DEFLECTION SCHEMATIC DIAGRAM
(DEFLECTION PCB)

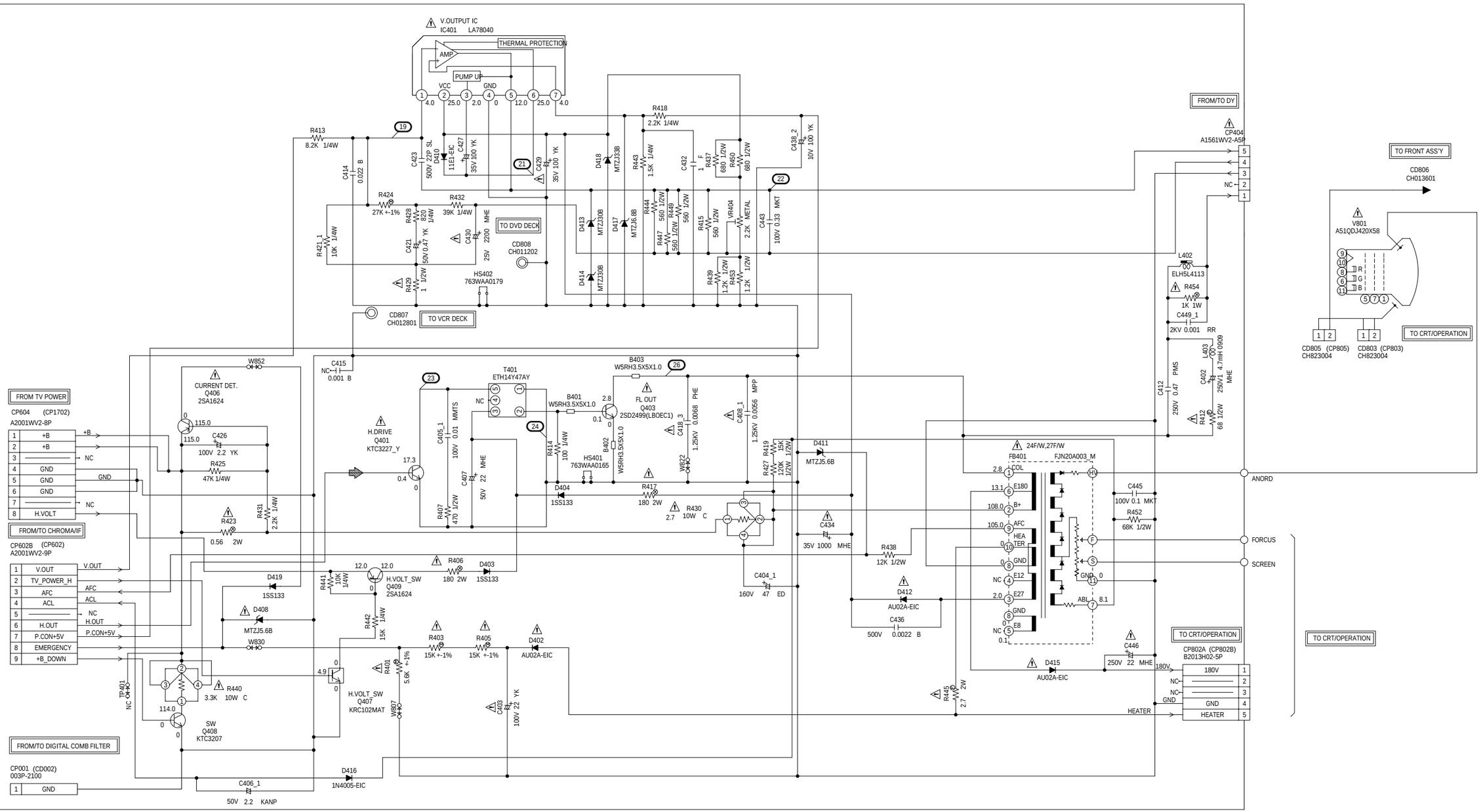

NOTE:THE DC VOLTAGE AT EACH PART WAS MEASURED WITH THE DIGITAL TESTER WHEN THE COLOR BROADCAST WAS RECEIVED IN GOOD CONDITION AND PICTURE IS NORMAL.

NOTE:THIS SCHEMATIC DIAGRAM IS THE LATEST AT THE TIME OF PRINTING AND SUBJECT TO CHANGE WITHOUT NOTICE.

CAUTION: SINCE THESE PARTS MARKED BY ⚠ ARE CRITICAL FOR SAFETY,USE ONES DESCRIBED IN PARTS LIST ONLY .

ATTENTION: LES PIECES REPAREES PAR UN ⚠ ETANT DANGEREUSES AN POINT DE VUE SECURITE N'UTILISER QUE CELLS DECRITES DANS LA NOMENCLATURE DES PIECES.

CAUTION: DIGITAL TRANSISTOR

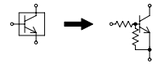

CRT/OPERATION SCHEMATIC DIAGRAM

(CRT PCB)

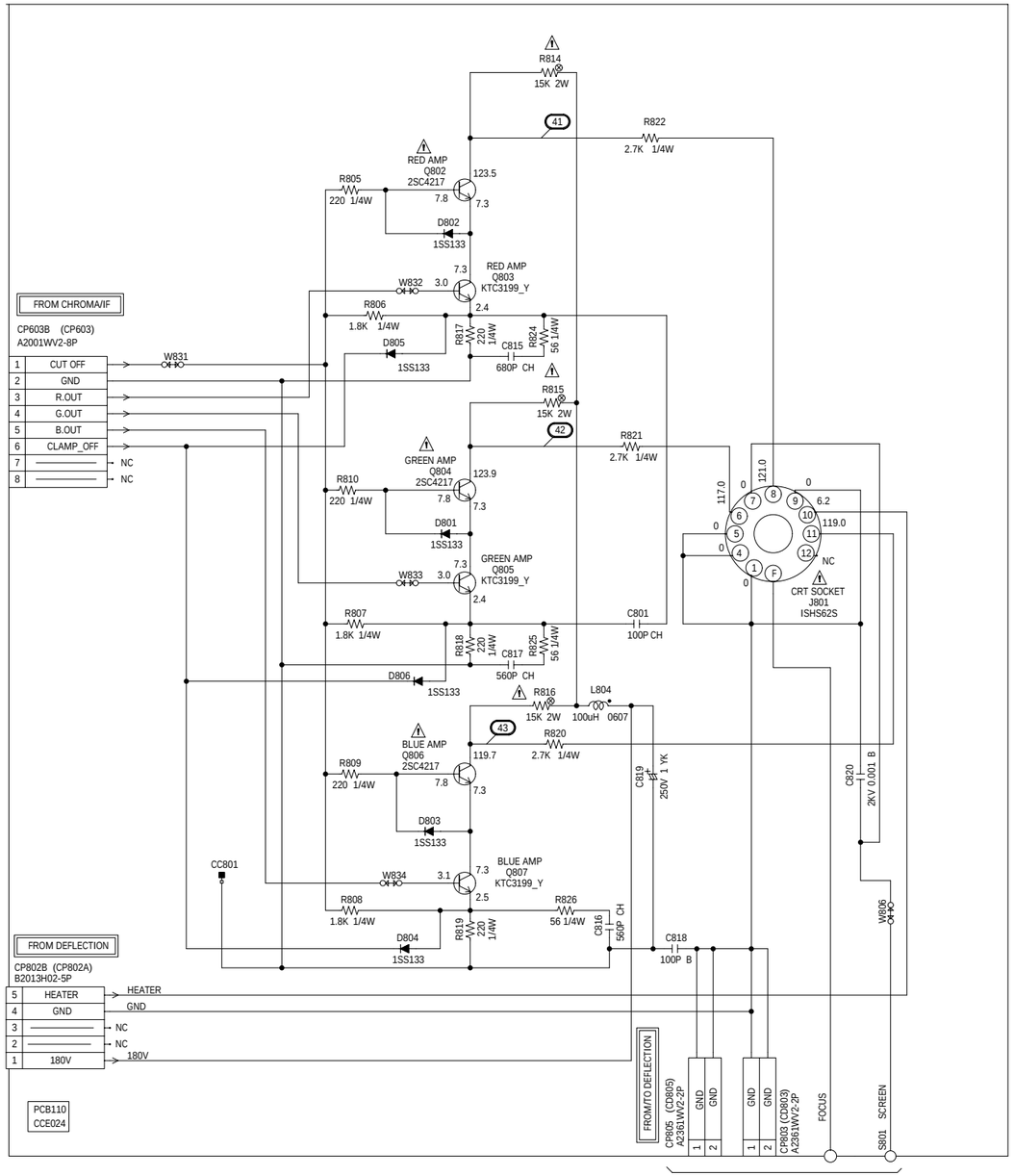

(OPERATION PCB)

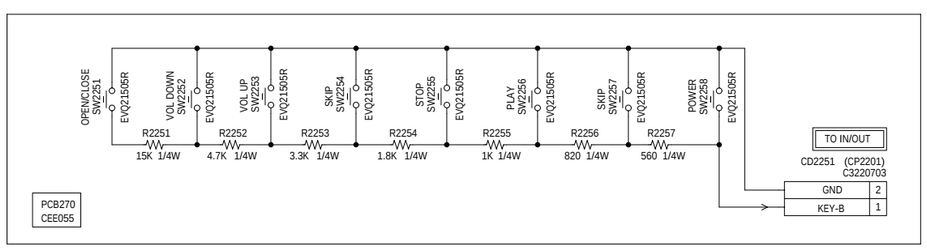

NOTE: THE DC VOLTAGE AT EACH PART WAS MEASURED WITH THE DIGITAL TESTER WHEN THE COLOR BROADCAST WAS RECEIVED IN GOOD CONDITION AND PICTURE IS NORMAL.

NOTE: THIS SCHEMATIC DIAGRAM IS THE LATEST AT THE TIME OF PRINTING AND SUBJECT TO CHANGE WITHOUT NOTICE.

CAUTION SINCE THESE PARTS MARKED BY ⚠ ARE CRITICAL FOR SAFETY, USE ONES DESCRIBED IN PARTS LIST ONLY .

ATTENTION LES PIECES REPAREES PAR UN ⚠ ETANT DANGEREUSES AN POINT DE VUE SECURITE N'UTILISER QUE CELLS DECRITES DANS LA NOMENCLATURE DES PIECES.

MEMORY CARD2 SCHEMATIC DIAGRAM

(MEMORY CARD PCB)

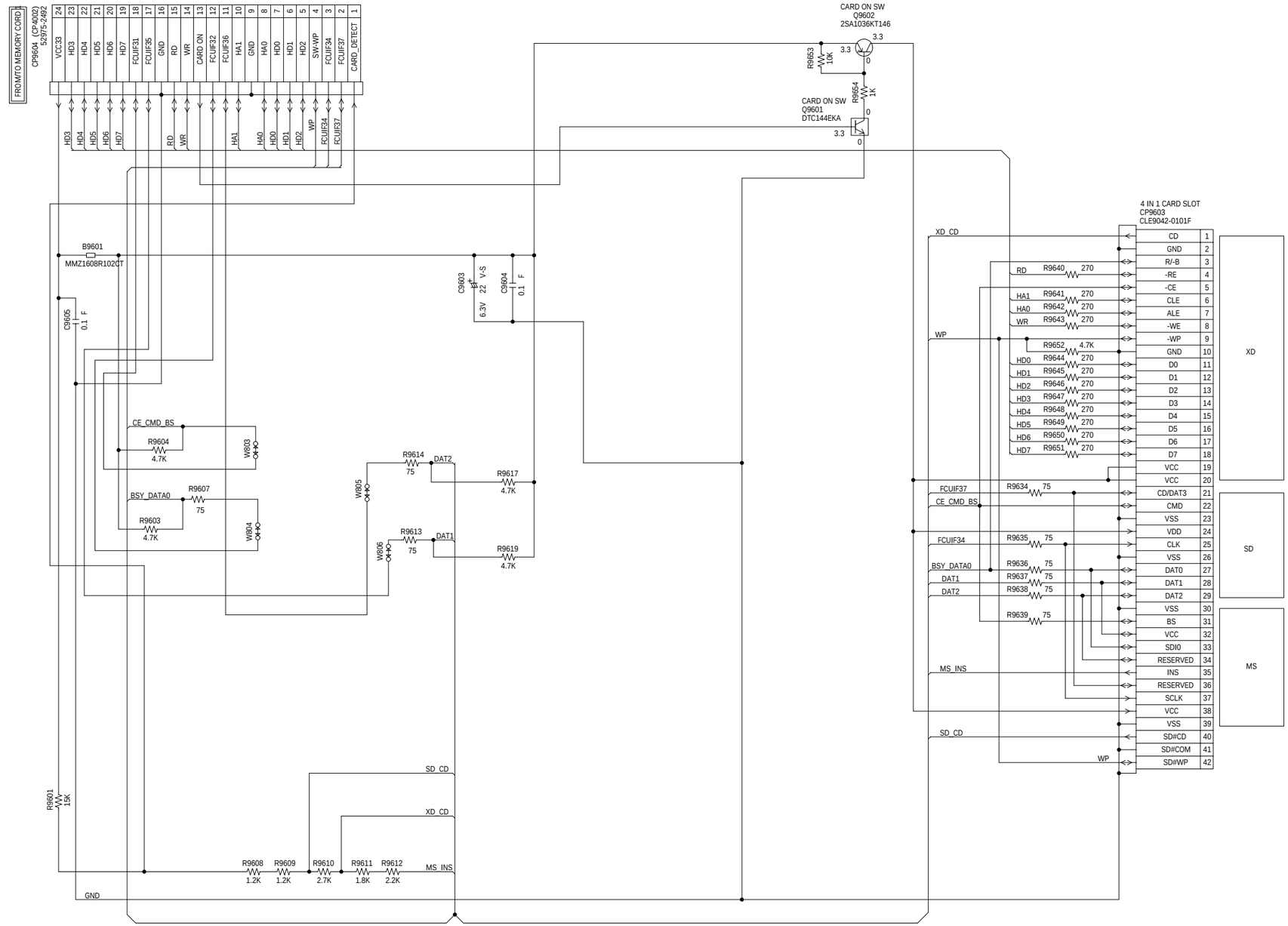

PCBDM0
DED022

NOTE: THIS SCHEMATIC DIAGRAM IS THE LATEST AT THE TIME OF PRINTING AND SUBJECT TO CHANGE WITHOUT NOTICE.

NOTE: THE DC VOLTAGE EACH PART WAS MEASURED WITH THE DIGITAL TESTER DURING PLAYBACK.

CAUTION: DIGITAL TRANSISTOR

LOADING MOTOR/SW SCHEMATIC DIAGRAM

(SW PCB)

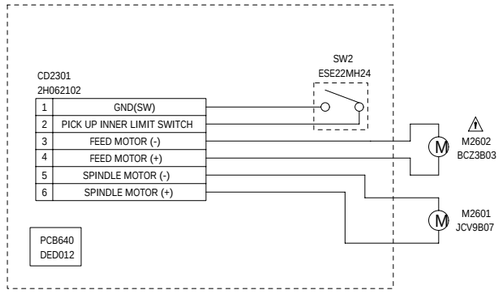

(LOADING MOTOR PCB)

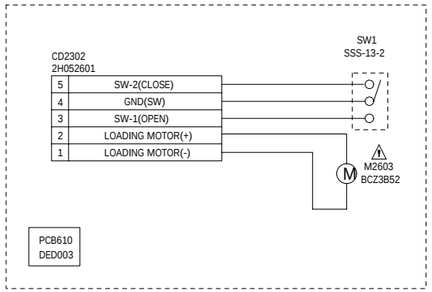

NOTE: THIS SCHEMATIC DIAGRAM IS THE LATEST AT THE TIME
OF PRINTING AND SUBJECT TO CHANGE WITHOUT NOTICE。

INTERCONNECTION DIAGRAM

CP9604: VCC33 24, HD3 23, HD4 22, HD5 21, HD6 20, HD7 19, FCUIF31 18, FCUIF35 17, GND 16, RD 15, WR 14, CARD ON 13, FCUIF32 12, FCUIF36 11, HA1 10, GND 9, HA0 8, HD0 7, HD1 6, HD2 5, SW-WP 4, FCUIF34 3, FCUIF37 2, CARD_DETECT 1

MEMORY CARD PCBDM0 DED022

CD4001: 24↔1, 23↔2, 22↔3, 21↔4, 20↔5, 19↔6, 18↔7, 17↔8, 16—9, 15↔10, 14↔11, 13→12, 12↔13, 11↔14, 10↔15, 9—16, 8↔17, 7↔18, 6↔19, 5↔20, 4↔21, 3↔22, 2↔23, 1↔24

CP4002: 1 VCC33, 2 HD3, 3 HD4, 4 HD5, 5 HD6, 6 HD7, 7 FCUIF31, 8 FCUIF35, 9 GND, 10 RD, 11 WR, 12 CARD ON, 13 FCUIF32, 14 FCUIF36, 15 HA1, 16 GND, 17 HA0, 18 HD0, 19 HD1, 20 HD2, 21 SW WP, 22 FCUIF34, 23 FCUIF37, 24 CARD_DETECT

DVD DRIVE DM-3

OPTICAL PICK-UP

SPINDLE MOTOR

SLED,LOADING MOTOR

FG SENSER

GND, F, Vref, VCC, E, D, C, SW1(DVD/CD), VRF(RF_OUT), B, A, VR(DVD), VR COM, VR(CD), GND, LD(CD), PD/GND, LD(DVD), GND, NC, T DRV, T RTN, F DRV, F RTN

CD2301 ↔ CP2601: 1 GND, 2 F, 3 Vref, 4 VCC, 5 E, 6 D, 7 C, 8 SW1(DVD/CD), 9 VRF(RF_OUT), 10 B, 11 A, 12 VR(DVD), 13 VR COM, 14 VR(CD), 15 GND, 16 LD(CD), 17 PD/GND, 18 LD(DVD), 19 GND, 20 NC, 21 T DRV, 22 T RTN, 23 F DRV, 24 F RTN

FFC: CLOSE, GND(D), OPEN, LD+, LD-

CP2602: 1 CLOSE, 2 GND(D), 3 OPEN, 4 LD+, 5 LD-

SP1+, SP1-, SLD+, SLD-, LIMIT SW, SW(GND)

CP2603: 1 SP1+, 2 SP1-, 3 SLD+, 4 SLD-, 5 LIMIT SW, 6 SW(GND)

DVD PCB PCB130 DME028

L4002

CD4002 ↔ CP8001: 1 GND(D), 2 GND(D), 3 TX, 4 RX, 5 GND(M), 6 P.CON+9V, 7 P.CON+5V, 8 P.CON+3.3V, 9 P.CON+3.3V, 10 GND(A), 11 SPDIF

CP8101_3 ↔ CD8101 FFC ↔ CP8002: 1 CVBS, 2 GND, 3 C(CVBS), 4 GND, 5 Y, 6 GND, 7 AUDIO-L, 8 GND, 9 AUDIO-R, 10 ZERO, 11 DVD RESET, 12 GND

CD2251 (GND, KEY-B) — OPERATION PCB PCB270 CED055 — CP2201 (GND, KEY-B)

HEADPHONE_JACK J2201

SPEAKER 4Ω 5W SP351 8 OHM — CD303 — CP303 (SOUND L+, SOUND L-, SOUND R-, SOUND R+)

SPEAKER SP352 8 OHM

COMMAND TRANSMITTER TM101 — OS2201 (Vout, GND, B+)

FULL ERASE HEAD ASS'Y H5002 (FE HEAD (HOT), FE HEAD (GND)) — CP4503 (FE HEAD(HOT), FE HEAD(GND))

HALL SENSOR, MAIN COIL, ROTOR MAGNET, MR FG SENSOR (VCC, O, G)

HALL VCC, HALL IN, OUT SWITCH LOGIC

CP101: 1 CAP_FG, 2 CAP_VCO, 3 VCC, 4 CAP.M F/R, 5 I_LIMIT, 6 MOTOR GND, 7 GND, 8 LD/CY_VCO, 9 CAP_CTL, 10 LDM CTL, 11 CYL_FG/PG, 12 CYL_CTL

CAPSTAN DD UNIT ASS'Y M2001

FFC 1–7 — RED, WHITE — LM — LOADING MOTOR M101

CYLINDER UNIT ASS'Y UN4001: D-PG GND, D-PG OUT, M-GND, D-COM, D-W OUT, D-V OUT, D-U OUT

MONITOR TUNER TU001: 17 VIDEO OUT, 16 NC, 15 AT+30V, 14 SIF OUT, 13 AUDIO OUT, 12 AFT OUT, 11 DATA, 10 CLOCK, 9 NC, 8 NC, 7 NC, 6 NC, 5 NC, 4 NC, 3 +B, 2 NC, 1 NC

CD4501 FFC ↔ CP4501: 1 HF1_(R), 2 HF_COM, 3 HF2 (L), 4 SP-CH1 (R), 5 SP_COM, 6 SP-CH2 (L), 7 EP/LP-CH1 (R), 8 EP/LP_COM, 9 EP/LP-CH2 (L)

HI-FI HEAD, SP HEAD, EP/LP HEAD

HEAD AUDIO CONTROL ASS'Y H5001

CP4502 ↔ FFC: AUDIO REC, AUDIO PB, CTL+, CTL-, AE HEAD(+), AE HEAD(-)

AUDIO, CONTROL, AE

VCR PCB PCB010 DME034

DEFLECTION PCB PCB080 CME029

CP001: GND 1

CD002 ↔ CP602B ↔ CD602 ↔ CP602: 1 GND, 2 V.OUT, 3 TV_POWER_H, 4 AFC, 5 ACL, 6 H.OUT, 7 P.CON+5V, 8 EMERGENCY, 9 +B_DOWN

L604

CP604 ↔ CD604 ↔ CP1702: 1 +B, 2 +B, 3 —, 4 GND, 5 GND, 6 GND, 7 P.CON+12V, 8 H.VOLT

CP603: 1 CUT_OFF, 2 GND, 3 R.OUT, 4 G.OUT, 5 B.OUT, 6 CLAMP_OFF, 7 —, 8 —

L603

FBT FBA01 — FOCUS, SCREEN — CP802A (180V, GND, HEATER) — CP804 (5, 4, 3, 2, NC, 1)

S801 FOCUS SCREEN IN — CP802B (180V, GND, HEATER)

V801 H.V — ANODE — CRT — CD603

CRT SOCKET J801 (1–12)

CP603B: CUT_OFF 1, GND 2, R.OUT 3, G.OUT 4, B.OUT 5, CLAMP_OFF 6, — 7, — 8

CRT PCB PCB110 CCE024

CP805 (GND, GND) — CD805 — CP803 (GND, GND) — CD803

DEGAUSS COIL L1703 — CP1704 (1, 2)

BLADE WIDE — WHITE — CD1703 WHITE — BLACK — CD1704 BLACK

AC120V_60Hz CD1702

L1704

FRONT VIDEO JACK J2202 — YELLOW

FRONT AUDIO L JACK J2203 — WHITE

FRONT AUDIO R JACK J2204 — RED

REAR IN JACK J4201

REAR OUT JACK J4202

COAXIAL J8007

CAUTION SINCE THESE PARTS MARKED BY ⚠ ARE CRITICAL FOR SAFETY,USE ONES DESCRIBED IN PARTS LIST ONLY 。

ATTENTION LES PIECES REPAREES PAR UN ⚠ ETANT DANGEREUSES AN POINT DE VUE SECURITE N'UTILISER QUE CELLS DECRITES DANS LA NOMENCLATURE DES PIECES。

NOTE: THIS INTERCONNECTION DIAGRAM IS THE LATEST AT THE TIME OF PRINTING AND SUBJECT TO CHANGE WITHOUT NOTICE。

WAVEFORMS

MPEG/MICON

10ns
1.0V

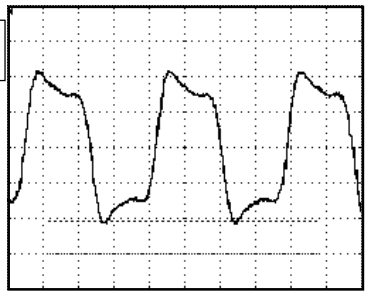

①

200ns
1.0V

②

RF AMP/MOTOR DRV

100ns
200mV

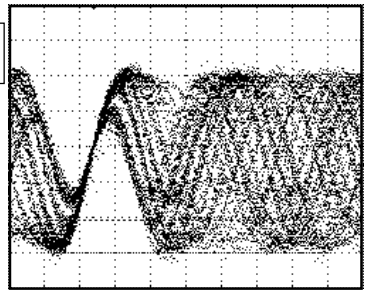

③

100ns
200mV

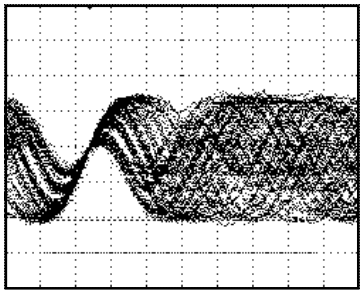

④

MEMORY

5ns
200mV

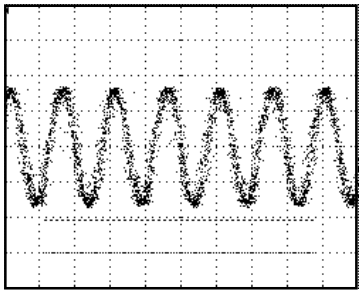

⑤

AUDIO/JACK

500µs
1.0V

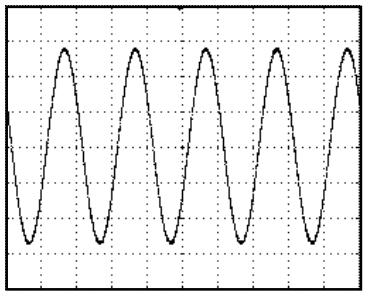

⑥

500µs
1.0VV

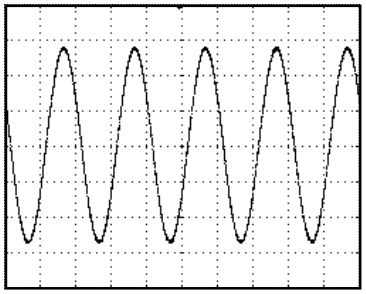

⑦

10µs
200mV

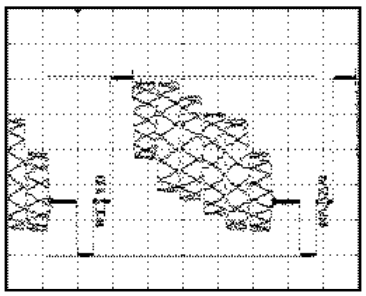

⑧

100µs
200mV

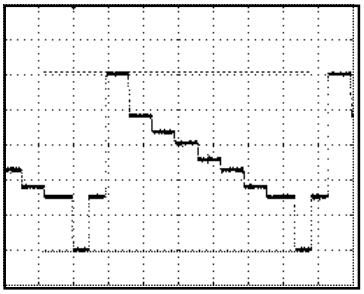

⑨

10µs
100mV

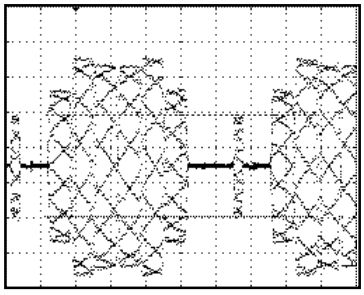

⑩

Y/C/AUDIO/HEAD AMP

20µs
1.0V

⑪

2µs
1.0V

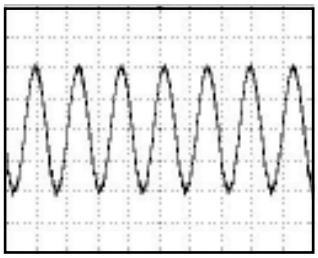

⑫

1ms
1.0V

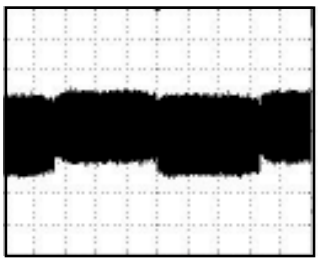

⑬

5ms
2.0V

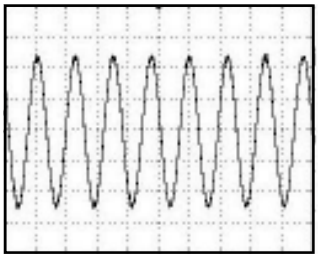

⑭

20µs
20V

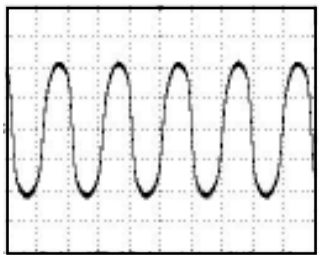

⑮

NOTE: The following waveforms were measured at the point of the corresponding balloon number in the schematic diagram.

WAVEFORMS

MICON

20ms
2.0V

⑯

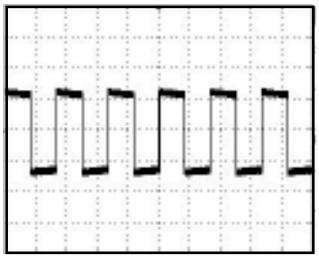

1ms
2.0V

⑰

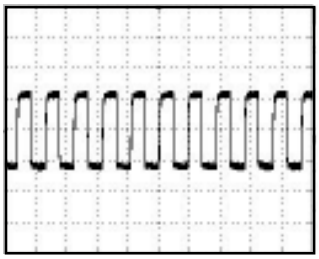

SOUND AMP/SURROUND

1ms
200mV

⑱

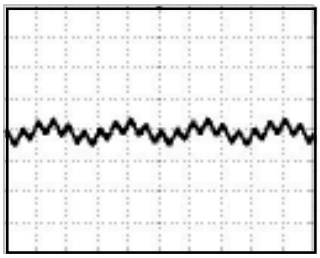

DEFLECTION

10ms
0.2V

⑲

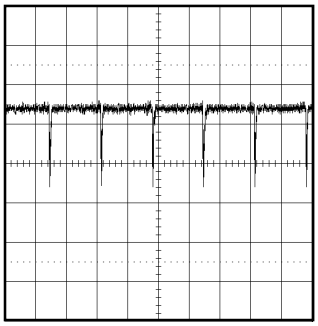

Hi-Fi/DEMODULATOR

1ms
1.0V

⑳

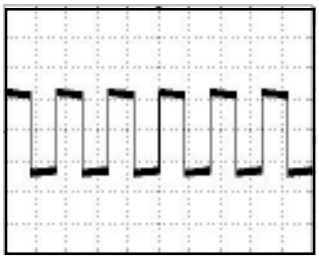

DEFLECTION

10ms
10V

㉑

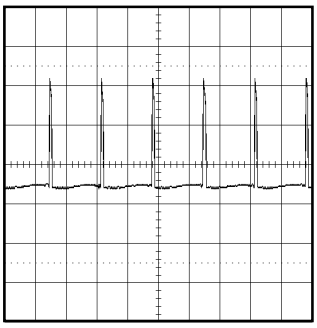

10ms
10V

㉒

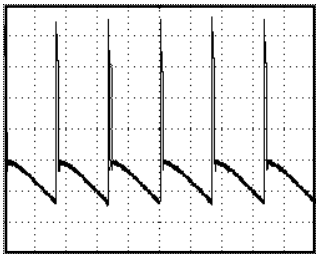

50µs
10V

㉓

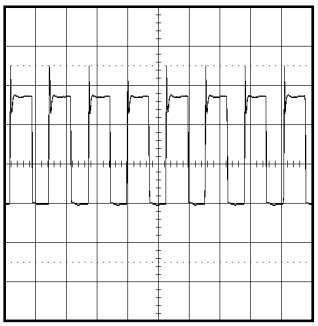

50µs
5.0V

㉔

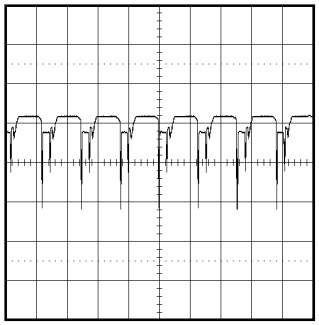

CHROMA/IF

20µs
0.5V

㉕

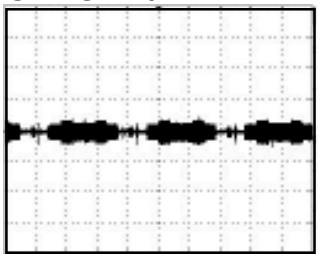

DEFLECTION

20µs
200V

㉖

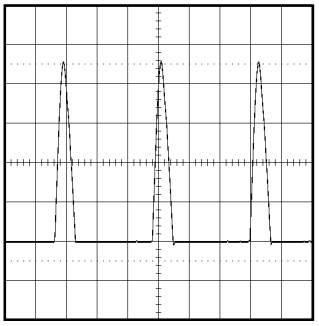

MICON

50µs
2.0V

㉗

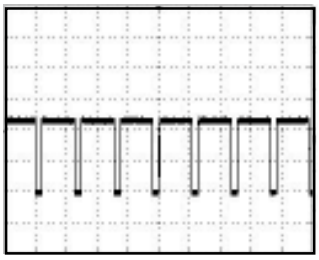

10ms
2.0V

㉘

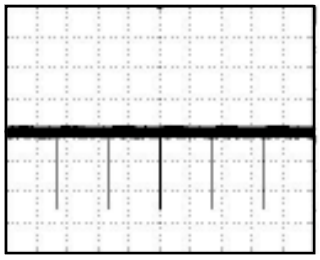

DVD IN/OUT

1ms
2.0V

㉙

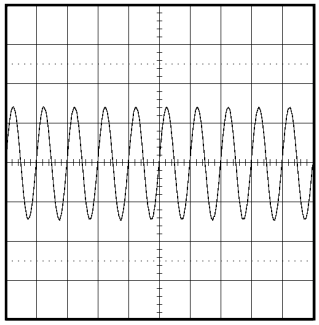

1ms
2.0V

㉚

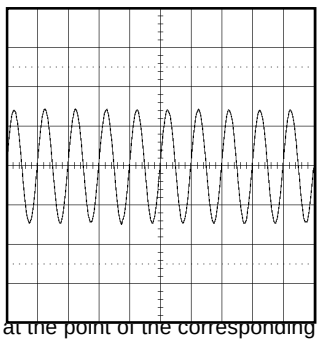

NOTE: The following waveforms were measured at the point of the corresponding balloon number in the schematic diagram.

WAVEFORMS

DIGITAL COMB FILTER

20µs
0.5V

(31)

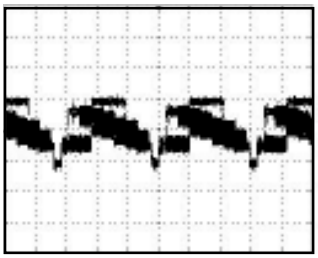

0.5ms
0.5V

(32)

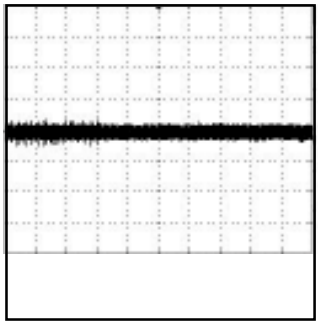

CHROMA/IF

20µs
0.5V

(33)

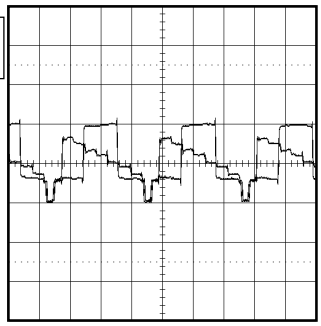

200ns
200mV

(34)

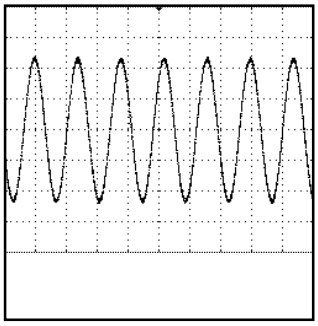

20µs
1.0V

(35)

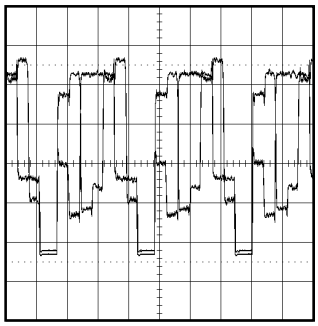

20µs
1.0V

(36)

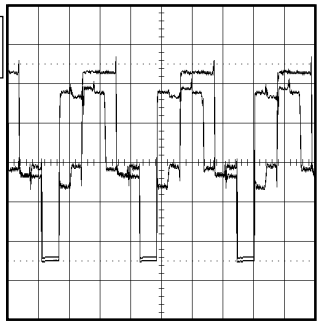

20µs
1.0V

(37)

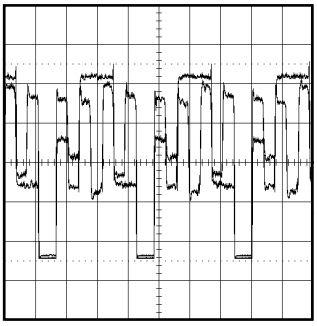

10ms
1.0V

(38)

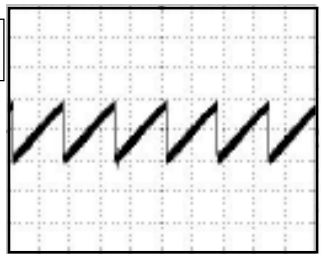

50µs
0.5V

(39)

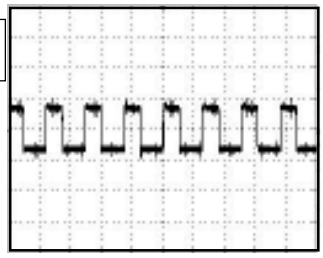

50µs
2.0V

(40)

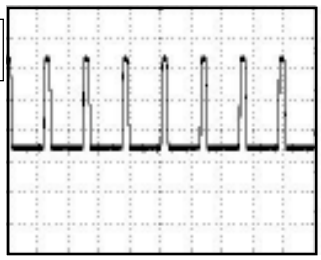

CRT/OPERATION

20µs
50V

(41)

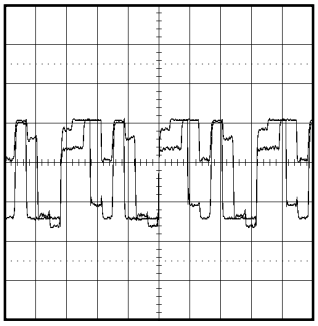

20µs
50V

(42)

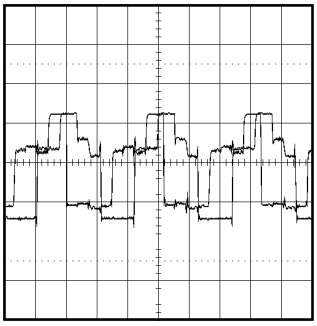

20µs
50V

(43)

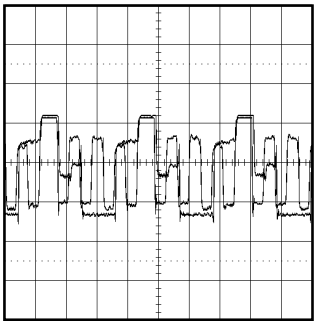

NOTE: The following waveforms were measured at the point of the corresponding balloon number in the schematic diagram.

MECHANICAL EXPLODED VIEW

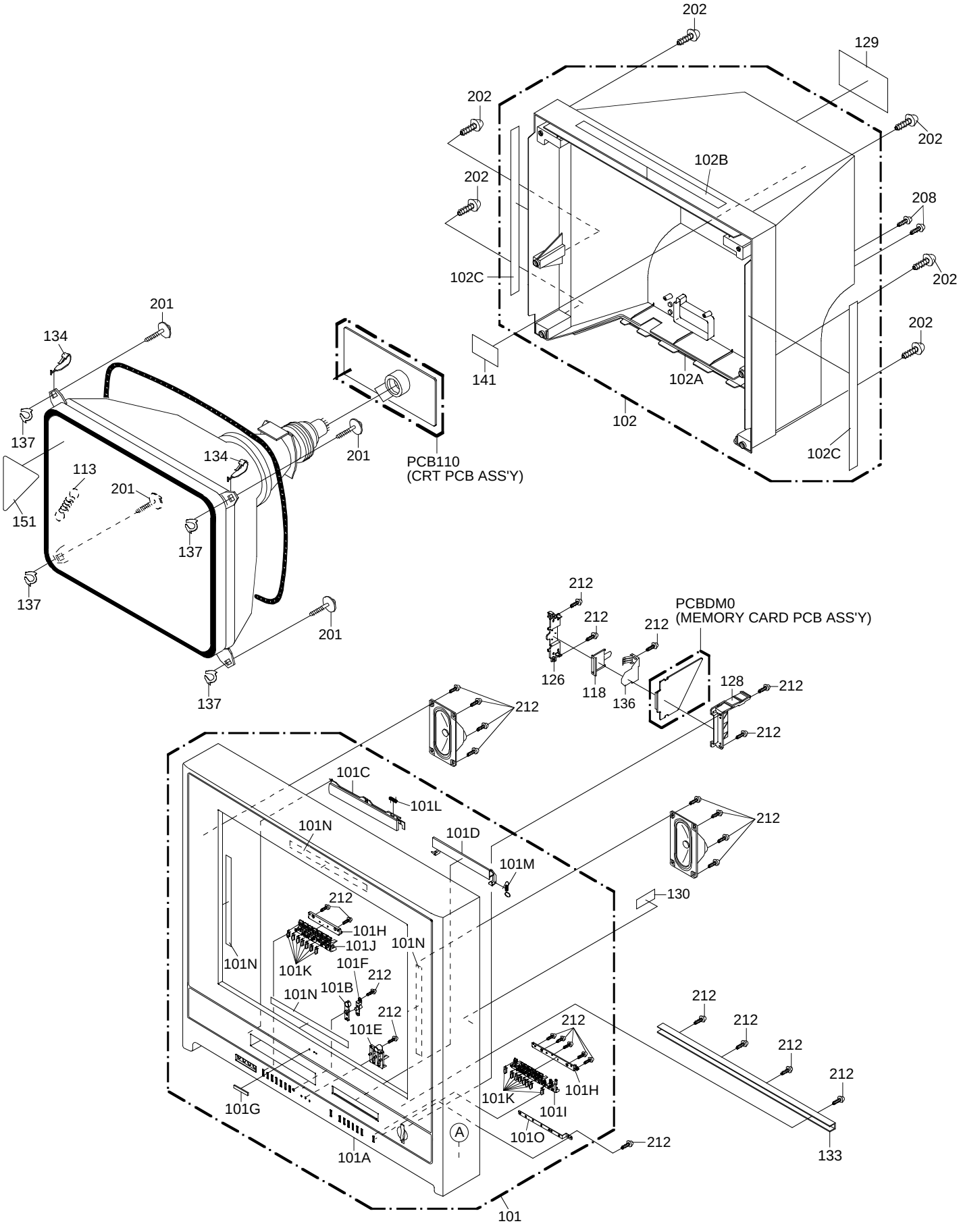

MECHANICAL EXPLODED VIEW

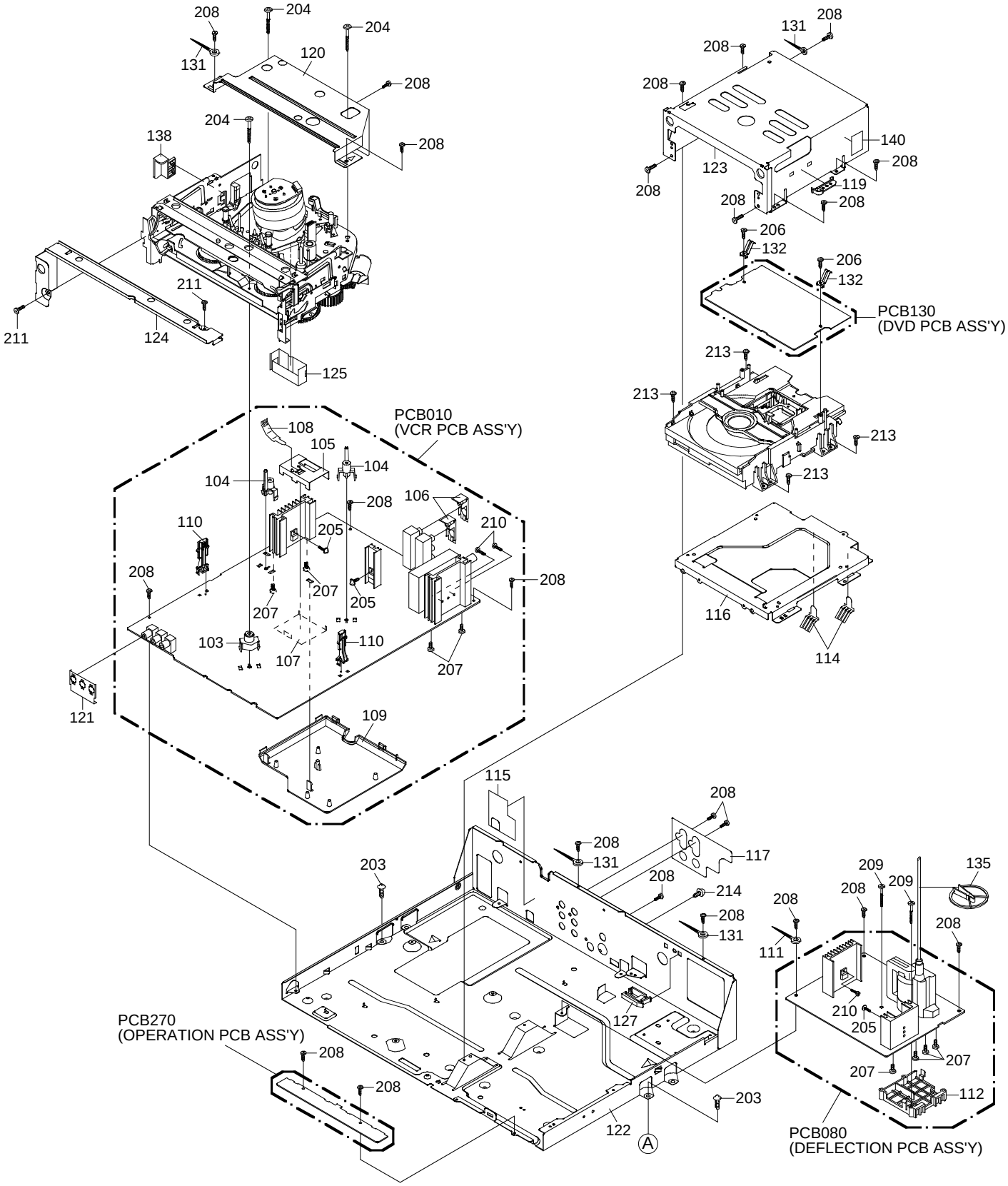

MECHANICAL EXPLODED VIEW
(PACKING DIAGRAM)

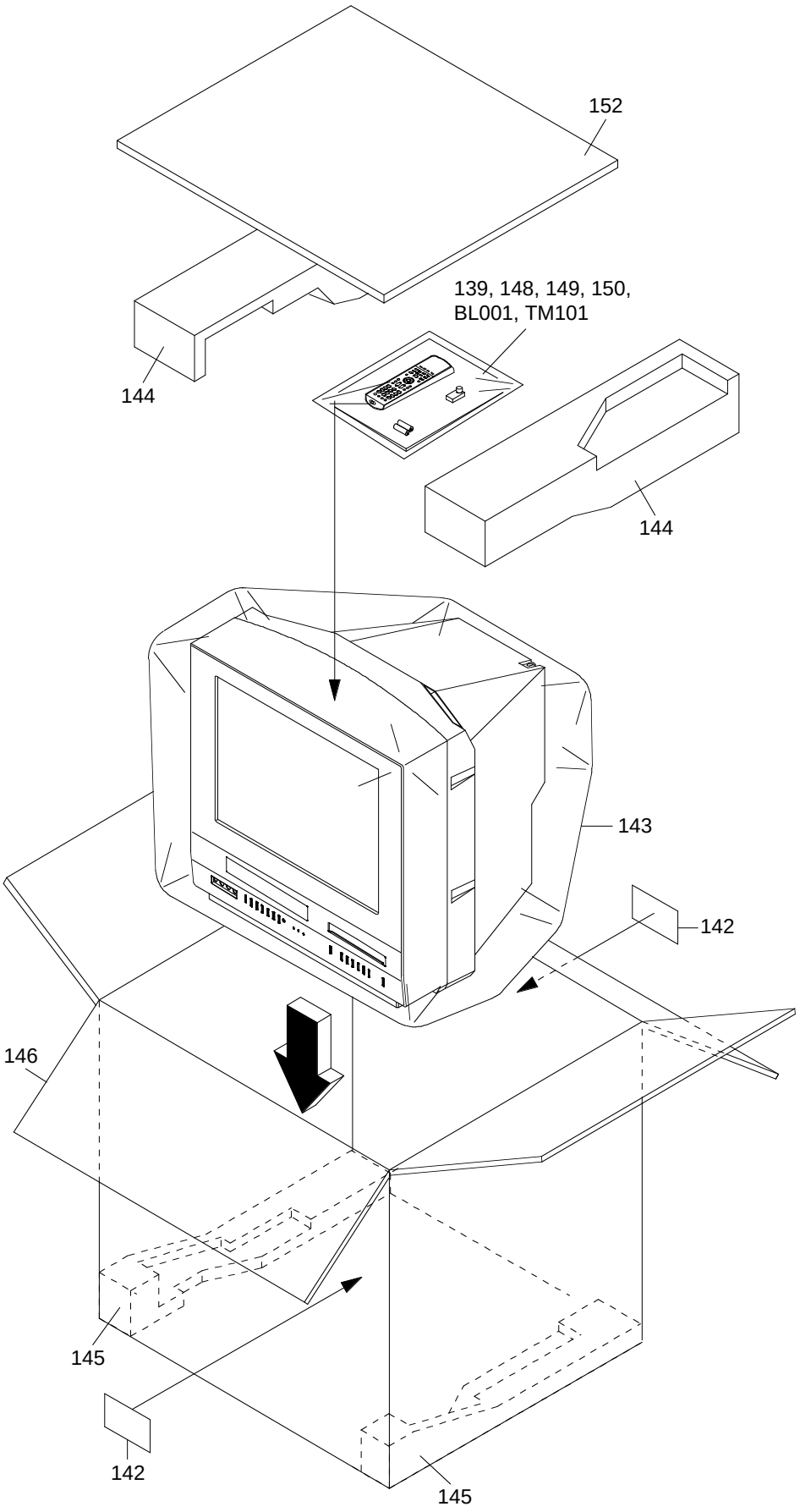

CHASSIS EXPLODED VIEW (TOP VIEW)

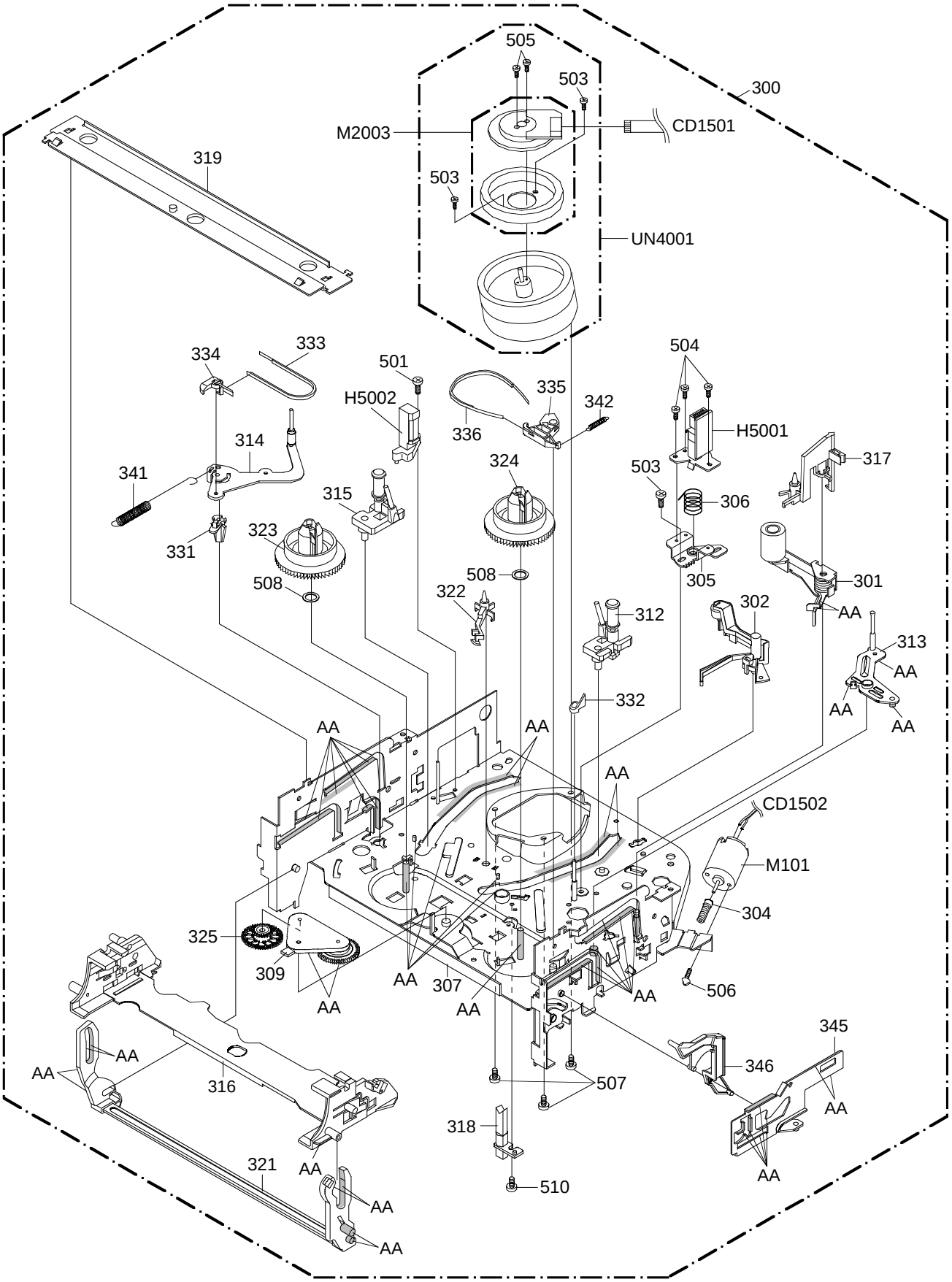

CLASS	MARK
GREASE	AA

NOTE: Applying positions AA for the grease are displayed for this section. Check if the correct grease is applied for each position.

CHASSIS EXPLODED VIEW (BOTTOM VIEW)

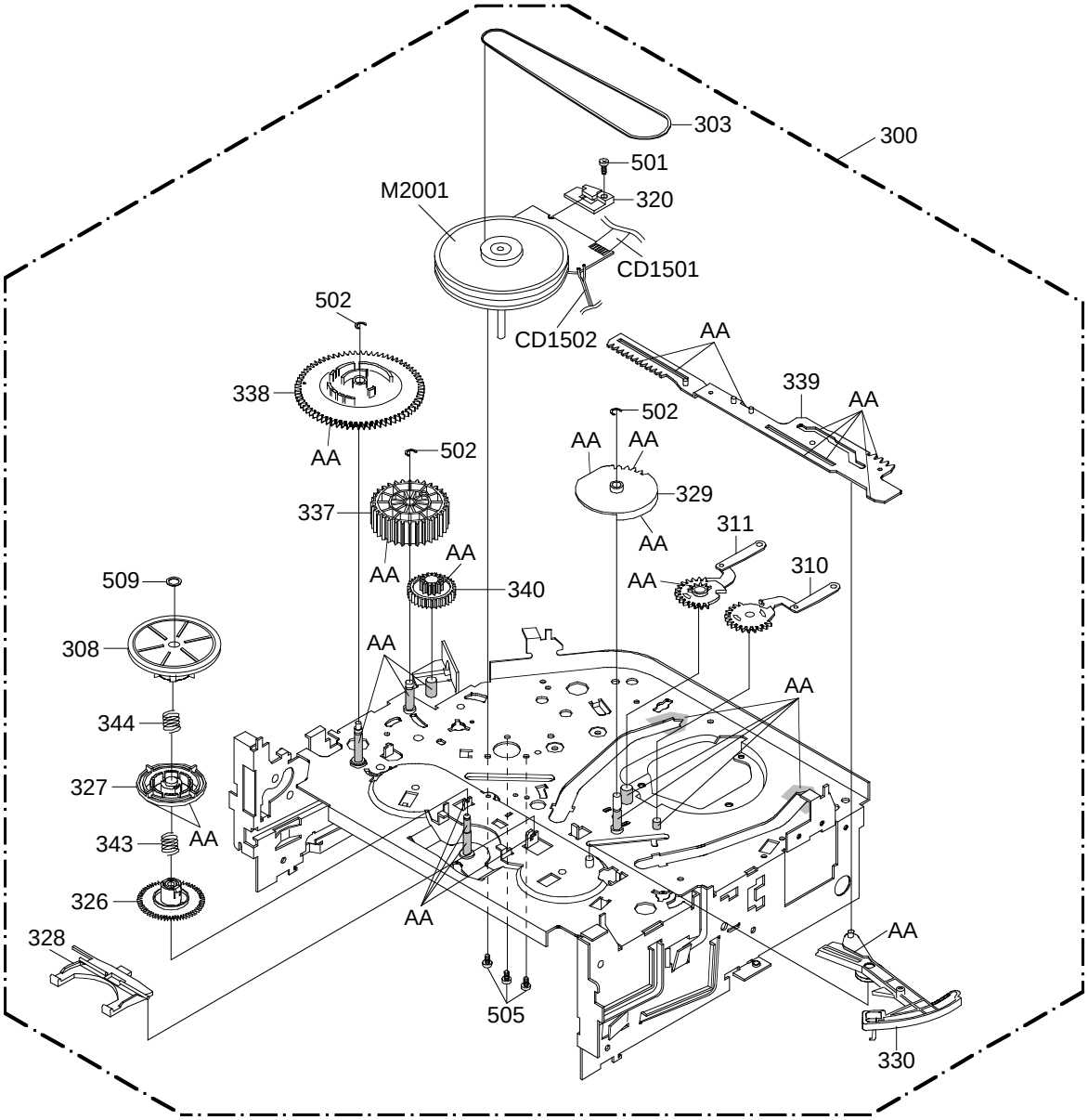

CLASS	MARK
GREASE	AA

NOTE: Applying positions AA for the grease are displayed for this section. Check if the correct grease is applied for each position.

DVD DECK EXPLODED VIEW

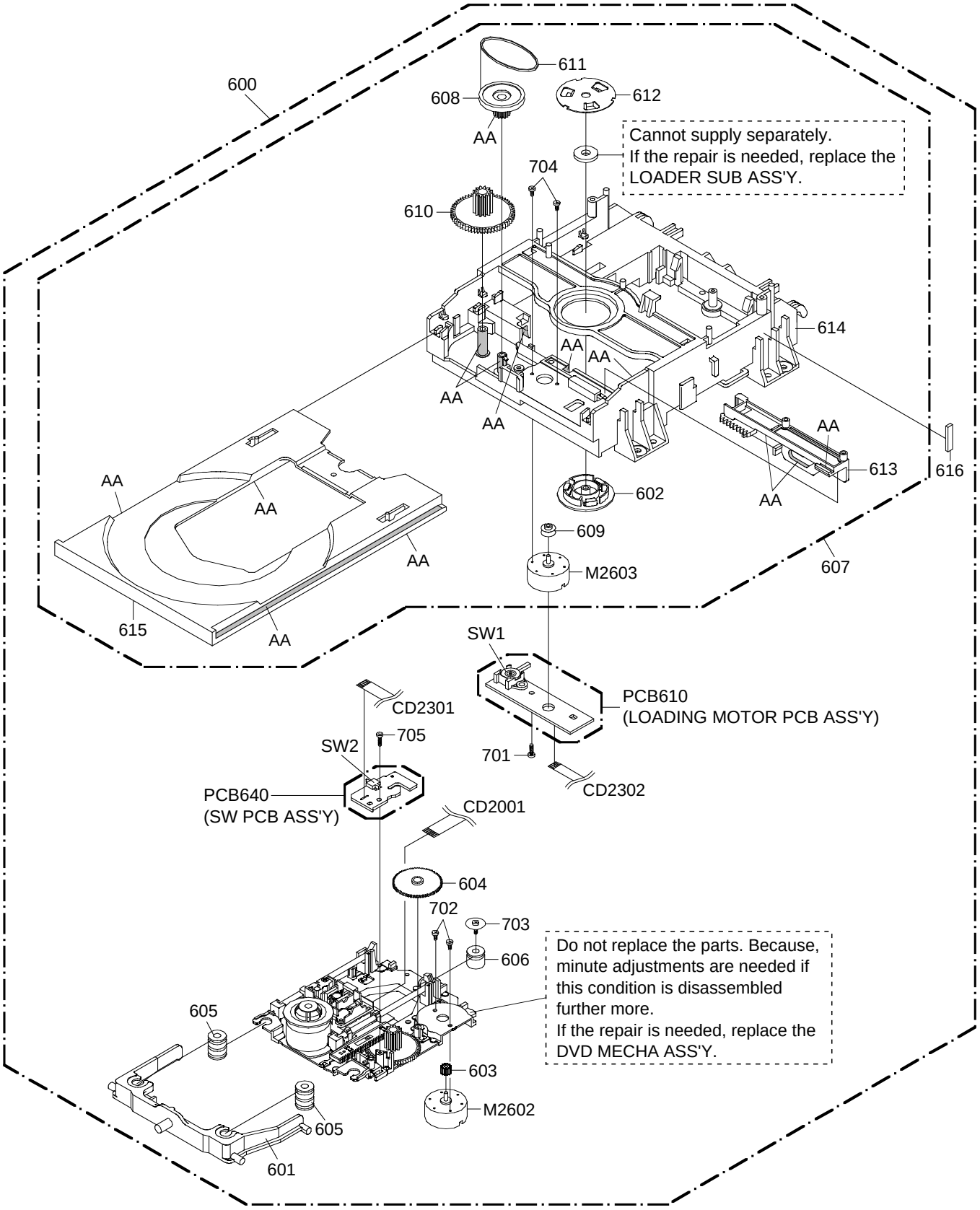

CLASS	MARK
GREASE	AA

NOTE: Applying positions AA for the grease are displayed for this section.
Check if the correct grease is applied for each position.

MECHANICAL REPLACEMENT PARTS LIST

Location No.	TSB P/N	Reference No.	Description
101	AE007222	7A701A374A	FRONT CABI ASS'Y
101A	AE007223	701WPJC984	CABINET,FRONT
101B	AE003101	711WPA0200	PLATE,FRONT
101C	AE007224	712WPJC125	FLAT,FLAP
101D	AE007225	712WPJC126	FLAP,DVD
101E	AE003104	713WPA0311	GLASS,LED
101F	AE003105	713WPA0312	GUIDE,REMOCON
101G	AD302008	7235490036	BADGE,BRAND
101H	AE003106	735WPA0805	STOPPER,BUTTON
101I	AE007034	735WPAA843	BUTTON,FRAME-DVD
101J	AE007035	735WPAA844	BUTTON,FRAME-VCR
101K	AE006499	735WPEA002	BUTTON,CAP
101L	AD301686	743WKA0037	SPRING,FLAP
101M	AE001324	742WKA0001	SPRING,DVD-FLAP
101N	AE003110	800WQ0A052	FELT SHEET
101O	AE003462	752WSAA068	SHIELD BUTTON,DVD
102	AE007087	7A702A123A	BACK CABI ASS'Y
102A	AE007088	702WPAA851	CABINET,BACK
102B	AE003113	800WQ0A036	FELT SHEET
102C	AE003112	800WQ0A032	FELT SHEET
103	BZ710577	701WPA0686	HOLDER,DECK
104	BZ710658	701WPA0751	HOLDER,DECK
105	BZ710466	752WSA0230	SHIELD,CASE HEAD AMP
106	BZ710659	752WSA0290	SHIELD,COMPO
107	AD301956	752WSA0308	SHIELD,COVER HEAD AMP
108	BZ710331	753WUAA006	SPRING,EARTH HEAD AMP
109	AD301957	755WPA0035	COVER,PCB
110	BZ710498	85OP700038	HOLDER,END SENSOR
111	AD301370	899EFBA002	WIRING-CLIP
112	BZ710459	761WPA0223	HOLDER,FBT
113	BZ710660	741WUA0021	SPRING,EARTH
114	AE004480	753WUA0069	SPRING,EARTH
115	AE006503	7250000596	SHEET,PC
116	AE004907	761WSAA023	ANGLE,DECK
117	AE000733	7230007691	SHEET,JACK
118	AE006504	752WSA0490	SHIELD,CARD
119	AE006505	761WPA0322	HOLDER,FFC
120	AE007226	752WSAA122	SHIELD,COVER DECK
121	BZ710671	752WSA0292	SHIELD,AV JACK
122	AE006506	752WSAA075	PLATE,BOTTOM
123	AE006507	752WSA0489	DVD,TOP
124	AE006508	752WSAA080	VCR,TOP
125	AD301966	752WSA0327	SHIELD,COVER FPC
126	AE006509	761WPA0371	HOLDER,CARD 1
127	AE000164	774WPA0005	HOLDER,WIRE-2
128	AE006510	761WPA0372	HOLDER,CARD 2
129	AE007227	722549A445	SHEET,RATING
130	AE005650	723000C727	SHEET,CAUTION
131	BZ710039	8995034000	CORD CLIP UL CO.
132	AD301574	744WUA0013	SPRING,EARTH
133	AE005981	752WSAA083	ANGLE,FRONT
134	BZ710259	762WPA0011	HOLDER,CRT WIRE
135	BZ710260	899HV3T000	HOLDER,ANODE WIRE
136	AE007228	752WUAA002	SHIELD,CARD 2
137	AE005971	769WSAA012	WASHER CRT T=0.5
138	BZ710618	755WPAA012	PLATE,COVER LIGHT (L)
139	AE007229	J5T80101B	INSTRUCTION BOOK
140	AE007170	753WEA0019	SHEET,CU
141	AE007091	726000A083	SHEET,CRT SERVICEMAN
142	AE007230	723000C862	SHEET,BAR CODE
143	AE005914	791WHAA114	FILM BAG
144	AE003117	792WHA0522	PACKAGE,TOP
145	AE003118	792WHA0523	PACKAGE,BOTTOM
146	AE007231	793WCDC669	GIFT BOX
147	AE006516	A5T8018975	INSTRUCTION BOOK KIT
148	AE003958	JB5KD300	POLYBAG,INSTRUCTION(RED CAUTION)
149	AE004983	J2D60117A	REGISTRATION CARD

MECHANICAL REPLACEMENT PARTS LIST

Location No.	TSB P/N	Reference No.	Description	
150	AE004982	J2D60129A	INFORMATION SHEET	
151	AE007232	723000C863	POP LABEL	
152	AE007094	795WCDA019	PAD	
201	AE005916	8141J50C5U	SCREW,TAP TITE(P) GW22	5x35
202	AE004847	8117540A6U	SCREW,TAP TITE(B0) TRUSS	4x16
203	AE003523	811754080U	SCREW,TAP TITE(B0) TRUSS	4x8
204	AE005536	8109130B9U	SCREW,TAP TITE(B) R PAN	3x29
205	AE003524	8109I30A0U	SCREW,TAP TITE(B) WH7	3x10
206	AE003530	811022680U	SCREW,TAP TITE(P) BIND	2.6x8
207	AE005917	810963080Q	SCREW,TAP TITE(B) BRAZIER	3x8
208	AE003526	810923080U	SCREW,TAP TITE(B) BIND	3x8
209	AE005989	8107630A8U	SCREW,TAP TITE(S) BRAZIER	3x18
210	AE003531	810763080U	SCREW,TAP TITE(S) BRAZIER	3x8
211	AE005987	810723060U	SCREW,TAP TITE(S) BIND	3x6
212	AE003529	811063080U	SCREW,TAP TITE(P) BRAZIER	3x8
213	AE005541	810F13080U	SEMS(F)	3x8
214	AE003532	810723040U	SCREW,TAP TITE(S) BIND	3x4

CHASSIS REPLACEMENT PARTS LIST

	Location No.	TSB P/N	Reference No.	Description	
	300	AE006988	A5T7016420A	DECK ASSY	A5T7016420A
	301	AE005514	85OA400245	PINCH ROLLER BLOCK VA2	
	302	BZ710682	85OA500026	AHC ASS'Y	
	303	BZ710193	85OP200290	BELT,CAPSTAN (S)	
	304	BZ710515	85OP600581	WORM	
	305	AE005919	85OP500091	BASE,AC HEAD	
	306	BZ710112	85OP800324	SPRING,AC HEAD	
	307	AE005835	85OA000528	MAIN CHASSIS ASS'Y	
	308	BZ710517	85OA200089	CLUTCH ASS'Y	
	309	AE005920	85OA200092	ARM IDLER ASS'Y	
	310	AE005836	85OA300068	LOADING ARM S UNIT	
	311	AE005837	85OA300070	LOADING ARM T UNIT	
	312	BZ710521	85OA400223	INCLINED BASE T UINT 3S	
	313	AE005838	85OA400249	P5 ARM ASS'Y 2	
	314	AE005839	85OA400248	TENSION ARM ASS'Y 2	
	315	BZ710524	85OA400231	INCLINED BASE S UNIT	
	316	AE005840	85OA900234	CASS HOLDER ASS'Y	
	317	BZ710552	85OP900745	CASS,OPENER	
	318	BZ710106	85OP700035	REFLECTOR,LED	
	319	AE005841	85OP900755	BRACKET,TOP 3V	
	320	AE004275	85OP400549	HOLDER,CAPSTAN	
	321	AE005842	85OA900233	LINK UNIT	
	322	BZ710531	85OP000496	POST,CASS GUIDE	
	323	BZ710532	85OP200316	REEL,S (S)	
	324	BZ710533	85OP200317	REEL,T (S)	
	325	BZ710534	85OP200308	GEAR,IDLER	
	326	BZ710535	85OP200311	GEAR,CLUTCH	
	327	BZ710536	85OP200312	GEAR,COUPLING	
	328	BZ710537	85OP200313	LEVER,CLUTCH	
	329	BZ710538	85OP300194	GEAR,MAIN LOADING	
	330	BZ710092	85OP400490	LEVER,TENSION	
	331	BZ710093	85OP400492	HOLDER,TENSION	
	332	BZ710366	85OP400520	CAP.P4	
	333	BZ710762	85OP400542	BAND,TENSION	
	334	BZ710540	85OP400533	CONNECT,TENSION	
	335	BZ710541	85OP600573	ARM,BRAKE T	
	336	BZ710763	85OP600584	BAND,BRAKE T	
	337	BZ710543	85OP600577	CAM,PINCH ROLLER	
	338	BZ710544	85OP600578	CAM,MAIN	
	339	AE005843	85OP600585	ROD,MAIN	
	340	BZ710546	85OP600582	GEAR,JOINT	
	341	BZ710110	85OP800322	SPRING,TENSION	
	342	BZ710547	85OP800360	SPRING,BRAKE T	
	343	BZ710548	85OP800355	SPRING,COUPLING	
	344	BZ710549	85OP800356	SPRING,RING	
	345	AE005844	85OP900754	LEVER,LINK	
	346	BZ710551	85OP900744	LEVER,FLAP	
	501	AE005845	810722680U	SCREW,TAP TITE(S) BIND	M2.6x8
	502	AE005846	83ETW3000U	E-RING	3.0
	503	AE005847	810722640U	SCREW,TAP TITE(S) BIND	M2.6x4
	504	AE005848	810212060U	SCREW,PAN	M2x6
	505	AE005849	810912660U	SCREW,TAP TITE(B) PAN	M2.6x6
	506	AE005850	810A13040U	SCREW/WASHER(A)	M3x4
	507	AE005851	810A12650U	SCREW/WASHER(A)	M2.6x5
	508	BZ710056	82Q264713N	POLYSLIDER WASHER	2.6x4.7xT0.13
	509	BZ710054	82P184505N	POLYSLIDER WASHER(CUT)	1.8x4.5xT0.5
	510	AE005540	810722660U	SCREW,TAP TITE(S) BIND	2.6x6
	CD1501	BZ614292	122H071704	CORD JUMPER	2H071704
	CD1502	AD301953	122Y021002	CORD JUMPER	2Y021002
	H5001	AD301675	1523Q91003	HEAD (AUDIO CONTROL)	VTR-1X2RPE22-756
	H5002	AD301676	1543Q02014	HEAD (FULL ERASE)	VTR-1X2ERS11-154
⚠	M101	AE005552	1596S98002	MOTOR,LOADING	MDB2B66B
⚠	M2001	AE005853	1510S98044	CAPSTAN DD UNIT	F2QVB73B
	M2003	AE006792	1589S11025	MICRO MOTOR	I20AL34K
⚠	UN4001	AE006989	A5T7016500	CYLINDER UNIT ASS'Y	A5T7016500

DVD DECK REPLACEMENT PARTS LIST

	Location No.	TSB P/N	Reference No.	Description	
⚠	600	AE006521	A2F401H650	DVD MECHA ASS'Y	A2F401H650
	601	AE005003	92P100109A	HOLDER,TRAVERSE	
	602	AE003550	92P100094A	CLAMPER	
	603	AE003551	92P100088A	GEAR,MOTOR	
	604	AE005414	92P100108A	GEAR,MIDDLE	
	605	AE003538	92P200013A	INSULATOR(F)	
	606	AE003539	92P200014A	INSULATOR(R)	
	607	AE006115	92SBB0029A	LOADER SUB ASS'Y	
	608	AE003541	92P100095A	GEAR,PULLEY	
	609	AE003542	92P100097A	PULLEY,MOTOR	
	610	AE003549	92P100096A	GEAR,MAIN	
	611	AE003544	92P200012A	BELT,LOADING	
	612	AE003545	92P000014A	PLATE,CLAMPER	
	613	AE003546	92P100093A	RACK,LOADING	
	614	AE003547	92P100091A	FRAME,MAIN	
	615	AE003548	92P100092A	TRAY	
	616	BZ710149	800WFAA008	CUSHION C	
	701	AE003530	811022680U	SCREW,TAP TITE(P) BIND	2.6x8
	702	AE003554	814011723U	SCREW,PAN	M1.7x2.3 P3
	703	AE003555	816112080U	SEMS.TAP TITE(P) PAN W10	2x8
	704	AE003556	814011730U	SCREW,PAN	M1.7x3 P3
	705	AE003557	811022080U	SCREW,TAP TITE(P) BIND	2x8
	CD2001	AD301855	122H0O1901	CORD JUMPER	2H0O1901
	CD2301	AE003558	122H062102	CORD JUMPER	2H062102
	CD2302	AE003559	122H052601	CORD JUMPER	2H052601
⚠	M2602	AE005930	1515S98003	FEED MOTOR	BCZ3B03B
⚠	M2603	AE005931	1596S18003	MOTOR,LOADING	BCZ3B52B
	PCB610	AE005932	A5R801V610	PCB ASS'Y	DED003A
	PCB640	AE006740	A2F401H640	PCB ASS'Y	DED012B
	SW1	AE003564	0515S32002	SWITCH	SSS-13-2
	SW2	AE003565	0500101037	PUSH SWITCH	ESE22MH24

ELECTRICAL REPLACEMENT PARTS LIST

Location No.	TSB P/N	Reference No.		Description
		RESISTORS		
⚠R401	BZ210244	R4X5T6562F	R,METAL	5.6K OHM 1/6W
⚠R403	BZ210231	R4X5T6153F	R,METAL	15K OHM 1/6W
⚠R405	BZ210231	R4X5T6153F	R,METAL	15K OHM 1/6W
⚠R406	AD302023	R3X28A181J	R,METAL	180 OHM 2W
⚠R412	BZ210021	R65582680J	R,FUSE	68 OHM 1/2W
⚠R417	AD302023	R3X28A181J	R,METAL	180 OHM 2W
⚠R423	BZ210165	R3X18AR56J	R,METAL OXIDE	0.56 OHM 2W
⚠R429	BZ210150	R002T2010J	RC	1 OHM 1/2W
⚠R430	AD301920	R5X34F2R7J	R,CEMENT	0 2.7 OHM 10W
⚠R440	AD301921	R5X34F332J	R,CEMENT	0 3.3K OHM 10W
⚠R445	BZ210104	R6558A2R7J	R,FUSE	2.7 OHM 2W
⚠R454	BZ210003	R3K181102J	R,METAL OXIDE	1K OHM 1W
⚠R814	BZ210026	R3X18A153J	R,METAL OXIDE	15K OHM 2W
⚠R815	BZ210026	R3X18A153J	R,METAL OXIDE	15K OHM 2W
⚠R816	BZ210026	R3X18A153J	R,METAL OXIDE	15K OHM 2W
⚠R1701	BZ210206	R002T2155J	RC	1.5M OHM 1/2W
⚠R1702	BZ210080	R0G3K2275K	RC	2.7M OHM 1/2W
⚠R1706	AD300651	R002T4272J	RC	2.7K OHM 1/4W
⚠R1714	BZ210248	R3X181R15J	R,METAL OXIDE	0.15 OHM 1W
⚠R1717	BZ210249	R3X28A331J	R,METAL OXIDE	330 OHM 2W
⚠R1718	BZ210031	R5X2CE1R2J	R,CEMENT	1.2 OHM 7W
⚠R1720	AE005735	R63881R22J	R,FUSE	0.22 OHM 1W
⚠R3010	AD302206	R3X181180J	R,METAL OXIDE	18 OHM 1W
⚠R3021	AE000147	R3X181220J	R,METAL OXIDE	22 OHM 1W
⚠R3028	BZ210204	R3X1814R7J	R,METAL OXIDE	4.7 OHM 1W
		CAPACITORS		
C005	AE007076	E02LF0102M	CE	1000 UF 6.3V
C321	BZ210176	E02LF3222M	CE	2200 UF 25V
⚠C403	BZ110195	E02LU8220M	CE	22 UF 100V
C404	AE004798	E61DFB470M	CE	47 UF 160V
⚠C408	BZ210157	P4N8FJ562H	CMPP	0.0056UF 1.25KV
C412	BZ210173	P4J7F3474J	CMPP	0.47 UF 250V PMS
⚠C418	AE007077	P4G8FJ682H	CMPP	0.0068UF 1.25KV PHE
⚠C429	AD301434	E02LU4101M	CE	100 UF 35V
⚠C430	BZ110101	E5EZF3222M	CE	2200 UF 25V
⚠C434	BZ110055	E5EZF4102M	CE	1000 UF 35V
⚠C446	BZ110225	E5EZFD220M	CE	22 UF 250V
C449	BZ110202	C0PLRR713K	CC	0.001 UF 2KV R
C801	AD301321	CQG0CH412J	CC	100 PF 50V CH
C820	BZ110247	C0JBB0713K	CC	0.001 UF 2KV B
⚠C1701	BZ110025	P2122B224M	CMP	0.22 UF 275V ECQUL
C1705	AE000699	C0PLRR7S2K	CC	560 PF 2KV R
C1707	BZ110203	C0PLRR7W2K	CC	820 PF 2KV RR
⚠C1708	BZ110226	C0JBB07H3K	CC	0.0022UF 2KV B
⚠C1710	BZ110226	C0JBB07H3K	CC	0.0022UF 2KV B
⚠C1711	AE002878	CD39E0MQ3M	CC	0.0047UF 250V
⚠C1714	AE000700	E52DHC681M	CE	5 680 UF 200V
⚠C1716	BZ110010	E02L03222M	CE	2200 UF 25V
⚠C1717	BZ110055	E5EZF4102M	CE	1000 UF 35V
⚠C1720	AE006083	E61DFB221M	CE	220 UF 160V
⚠C1728	AE001253	E02L01222M	CE	2200 UF 10V
C1729	AE000699	C0PLRR7S2K	CC	560 PF 2KV R
⚠C1732	BZ110078	E02L03102M	CE	1000 UF 25V
⚠C1733	AE000467	E02LU54R7M	CE	4.7 UF 50V
		DIODES		
D101	AD301638	0010E00330	INFRARED LED	LTE-3271T-012A-O
D102	BZ410006	D1VT001330	DIODE,SILICON	1SS133T-77
D103	BZ410021	D97U05R61B	DIODE,ZENER	MTZJ5.6B T-77
D105	BZ410006	D1VT001330	DIODE,SILICON	1SS133T-77
D106	BZ410094	D97U01501B	DIODE,ZENER	MTZJ15B T-77
D108	BZ410006	D1VT001330	DIODE,SILICON	1SS133T-77
⚠D402	BZ410063	D2WTAU02A0	DIODE,SILICON	AU02A-EIC
D403	BZ410006	D1VT001330	DIODE,SILICON	1SS133T-77
D404	BZ410006	D1VT001330	DIODE,SILICON	1SS133T-77
⚠D408	BZ410021	D97U05R61B	DIODE,ZENER	MTZJ5.6B T-77
D410	BZ410043	D2WT011E10	DIODE,SILICON	11E1-EIC
D411	BZ410021	D97U05R61B	DIODE,ZENER	MTZJ5.6B T-77
⚠D412	BZ410063	D2WTAU02A0	DIODE,SILICON	AU02A-EIC
D413	BZ410019	D97U03001B	DIODE,ZENER	MTZJ30B T-77
D414	BZ410019	D97U03001B	DIODE,ZENER	MTZJ30B T-77
⚠D415	BZ410063	D2WTAU02A0	DIODE,SILICON	AU02A-EIC

ELECTRICAL REPLACEMENT PARTS LIST

Location No.	TSB P/N	Reference No.		Description
		DIODES		
D416	BZ410085	D2WXN40050	DIODE,SILICON	1N4005-EIC
D417	BZ410022	D97U06R81B	DIODE,ZENER	MTZJ6.8B T-77
D418	BZ410037	D97U03301B	DIODE,ZENER	MTZJ33B T-77
D419	BZ410006	D1VT001330	DIODE,SILICON	1SS133T-77
D601	AD300070	D97U01201B	DIODE,ZENER	MTZJ12B T-77
D602	AD300070	D97U01201B	DIODE,ZENER	MTZJ12B T-77
D603	AD300070	D97U01201B	DIODE,ZENER	MTZJ12B T-77
D605	AD300070	D97U01201B	DIODE,ZENER	MTZJ12B T-77
D801	BZ410006	D1VT001330	DIODE,SILICON	1SS133T-77
D802	BZ410006	D1VT001330	DIODE,SILICON	1SS133T-77
D803	BZ410006	D1VT001330	DIODE,SILICON	1SS133T-77
D804	BZ410006	D1VT001330	DIODE,SILICON	1SS133T-77
D805	BZ410006	D1VT001330	DIODE,SILICON	1SS133T-77
D806	BZ410006	D1VT001330	DIODE,SILICON	1SS133T-77
D1702	BZ410006	D1VT001330	DIODE,SILICON	1SS133T-77
D1703	AE000141	D97U02R71B	DIODE,ZENER	MTZJ2.7B T-77
⚠ D1704	BZ410007	D23TGP15J0	DIODE,SILICON	RGP15J-G23
⚠ D1705	BZ410062	D2WTRM11C0	DIODE,SILICON	RM11C-EIC
⚠ D1706	BZ410062	D2WTRM11C0	DIODE,SILICON	RM11C-EIC
⚠ D1707	BZ410007	D23TGP15J0	DIODE,SILICON	RGP15J-G23
D1709	BZ410006	D1VT001330	DIODE,SILICON	1SS133T-77
⚠ D1710	BZ410062	D2WTRM11C0	DIODE,SILICON	RM11C-EIC
⚠ D1711	BZ410062	D2WTRM11C0	DIODE,SILICON	RM11C-EIC
D1712	BZ410067	D97U02R21B	DIODE,ZENER	MTZJ2.2B T-77
⚠ D1713	BZ410010	D28T21DQN9	DIODE,SCHOTTKY	21DQ09N-TA2B1
D1715	AD300671	D97U01801B	DIODE,ZENER	MTZJ18B T-77
D1716	AD300731	D2WXN49370	DIODE,SILICON	1N4937
D1717	AD300671	D97U01801B	DIODE,ZENER	MTZJ18B T-77
⚠ D1718	AD300731	D2WXN49370	DIODE,SILICON	1N4937
⚠ D1719	BZ410115	D2LKB340L0	DIODE,SCHOTTKY	SB340L-6737
D1720	BZ410006	D1VT001330	DIODE,SILICON	1SS133T-77
D1721	BZ410006	D1VT001330	DIODE,SILICON	1SS133T-77
⚠ D1722	AD300731	D2WXN49370	DIODE,SILICON	1N4937
⚠ D1723	AD301980	D2CF2016L0	DIODE,SILICON	FE201-6L49
D1724	BZ410006	D1VT001330	DIODE,SILICON	1SS133T-77
D1726	BZ410006	D1VT001330	DIODE,SILICON	1SS133T-77
D1727	BZ410022	D97U06R81B	DIODE,ZENER	MTZJ6.8B T-77
D1728	BZ410006	D1VT001330	DIODE,SILICON	1SS133T-77
D1730	AD301980	D2CF2016L0	DIODE,SILICON	FE201-6L49
D1732	AD300070	D97U01201B	DIODE,ZENER	MTZJ12B T-77
D1733	BZ410006	D1VT001330	DIODE,SILICON	1SS133T-77
⚠ D1734	BZ410010	D28T21DQN9	DIODE,SCHOTTKY	21DQ09N-TA2B1
D2201	BZ410022	D97U06R81B	DIODE,ZENER	MTZJ6.8B T-77
D2205	BZ410087	0021E2Q140	LED	LTL-1CHEE-002A
D2206	BZ410087	0021E2Q140	LED	LTL-1CHEE-002A
D2207	BZ410087	0021E2Q140	LED	LTL-1CHEE-002A
D2602	AE004646	DE5RB2R21X	DIODE ZENER	02DZ2.2-X(TH3ORION
D3001	BZ410037	D97U03301B	DIODE,ZENER	MTZJ33B T-77
D3002	BZ410021	D97U05R61B	DIODE,ZENER	MTZJ5.6B T-77
D3003	BZ410090	D97U04R71B	DIODE,ZENER	MTZJ4.7B T-77
D3004	BZ410077	D2WXSB1400	DIODE,SCHOTTKY	SB140-EIC
D3005	BZ410012	D28TQS04N0	DIODE,SCHOTTKY	11EQS04N-TA1B2
D3007	BZ410043	D2WT011E10	DIODE,SILICON	11E1-EIC
D3008	BZ410010	D28T21DQN9	DIODE,SCHOTTKY	21DQ09N-TA2B1
D3011	BZ410010	D28T21DQN9	DIODE,SCHOTTKY	21DQ09N-TA2B1
D4001	BZ410086	DD7R0S3550	DIODE,SILICON	1SS355 TE-17
D4201	BZ410021	D97U05R61B	DIODE,ZENER	MTZJ5.6B T-77
D4204	BZ410006	D1VT001330	DIODE,SILICON	1SS133T-77
D4205	BZ410006	D1VT001330	DIODE,SILICON	1SS133T-77
D4207	BZ410006	D1VT001330	DIODE,SILICON	1SS133T-77
D5501	BZ410012	D28TQS04N0	DIODE,SCHOTTKY	11EQS04N-TA1B2
D5502	BZ410006	D1VT001330	DIODE,SILICON	1SS133T-77
D8111	BZ410086	DD7R0S3550	DIODE,SILICON	1SS355 TE-17
D8112	BZ410086	DD7R0S3550	DIODE,SILICON	1SS355 TE-17
		ICS		
IC101	AE006547	I51F58078A	IC	OEC8078A
IC103	AD301641	I9UF032310	IC	PST3231NR
IC199	AE007234	A5U001Q015	INIT DATA	BR24L04F-WE2
IC302	AD301983	I01FF58910	IC	AN5891SA-E1V
⚠ IC352	AD302184	I0FSP7522N	IC	AN7522N
⚠ IC401	BZ611025	I03TD80400	IC	LA78040

ELECTRICAL REPLACEMENT PARTS LIST

Location No.	TSB P/N	Reference No.		Description
			ICS	
IC601	AE004116	I03FC319N0	IC	LA76319NM-MPB-E
IC602	AE000143	I1KF98L100	IC	KIA78L10F-RTF
IC1501	AE006220	I05FEA45FG	IC	TC90A45FG
IC1502	AD301988	I0UF015010	IC	MM1501XNRE
IC1504	AD301988	I0UF015010	IC	MM1501XNRE
IC1505	AD301927	I0UF015040	IC	MM1504XNRE
⚠IC1701	AE002809	000220002W	PHOTO COUPLER	PS2561AL1-1-V(W)
⚠IC1702	AD302211	I1KJ9A431A	IC	KIA431A-AT
IC2301	AE003581	I03F065650	IC	LA6565-TE-L-E
IC2601	AE006550	ICQK0TQCG0	IC	ZR36708TQCG
⚠IC3001	AD301931	I1KA78R050	IC	KIA278R05PI
⚠IC3002	AD301929	I1KA78R090	IC	KIA278R09PI
⚠IC3003	AD301931	I1KA78R050	IC	KIA278R05PI
IC3004	AD301931	I1KA78R050	IC	KIA278R05PI
IC4001	AE006549	ICQK067780	IC	ZR36778HQCG
IC4002	AE005421	I57J0L02F0	IC	BR24L02F-WE2
IC4003	AE006061	I07F9E00W0	IC	BA33E00WHFP-TR
IC4005	AE005215	IFLJ0632H7	IC	K4S641632H-UC75
IC4006	AE006548	I5CJ032570	IC	SN74CBT3257PWR
IC4007	AE007241	S5U001QF01	MEMORY DATA	SST39VF1601-70-4C-EKE
IC4010	AE006548	I5CJ032570	IC	SN74CBT3257PWR
IC4501	BZ611095	I03F3205M0	IC	LA71205M-MPB
IC5501	BZ611114	I01F63FBP0	IC	AN3663FBP
IC8001	AD301988	I0UF015010	IC	MM1501XNRE
IC8002	AD301988	I0UF015010	IC	MM1501XNRE
IC8004	AE001295	I0QJ045800	IC	NJM4580M(TE1)
IC8102	AE003584	I17F017530	IC	PCM1753DBQR
			TRANSISTORS	
Q101	BZ410097	0000M00390	PHOTO TRANSISTOR	ST-304L
Q102	BZ510067	TNAAC05002	COMPOUND TRANSISTOR	KRC103SRTK
Q103	BZ410097	0000M00390	PHOTO TRANSISTOR	ST-304L
Q104	BZ410106	0002700680	PHOTO COUPLER	RPI-352C40N
Q105	BZ410106	0002700680	PHOTO COUPLER	RPI-352C40N
Q106	BZ510067	TNAAC05002	COMPOUND TRANSISTOR	KRC103SRTK
Q107	BZ410107	0002700690	PHOTO COUPLER	RPI-303
Q108	BZ410107	0002700690	PHOTO COUPLER	RPI-303
Q110	BZ510071	TNAAB05003	COMPOUND TRANSISTOR	KRC102SRTK
Q112	BZ510109	TCAA3875SY	TRANSISTOR,SILICON	KTC3875S_Y_RTK
Q114	BZ510108	TAAA1504SY	TRANSISTOR,SILICON	KTA1504S_Y_RTK
Q116	BZ510109	TCAA3875SY	TRANSISTOR,SILICON	KTC3875S_Y_RTK
Q350	BZ510109	TCAA3875SY	TRANSISTOR,SILICON	KTC3875S_Y_RTK
⚠Q401	BZ510097	TCAT03227Y	TRANSISTOR,SILICON	KTC3227_Y-AT
⚠Q403	BZ510040	TDUU024990	TRANSISTOR,SILICON	2SD2499(LB0EC1)
⚠Q406	BZ510004	TA3T016240	TRANSISTOR,SILICON	2SA1624-AA
Q407	BZ510096	TNATB03005	COMPOUND TRANSISTOR	KRC102MAT
Q408	BZ510087	TCAT032070	TRANSISTOR,SILICON	KTC3207-AT
Q409	BZ510004	TA3T016240	TRANSISTOR,SILICON	2SA1624-AA
Q601	BZ510071	TNAAB05003	COMPOUND TRANSISTOR	KRC102SRTK
Q602	BZ510109	TCAA3875SY	TRANSISTOR,SILICON	KTC3875S_Y_RTK
Q605	BZ510090	TPAAB05001	COMPOUND TRANSISTOR	KRA102SRTK
Q606	BZ510109	TCAA3875SY	TRANSISTOR,SILICON	KTC3875S_Y_RTK
⚠Q802	BZ510009	TC3F042170	TRANSISTOR,SILICON	2SC4217(D,E)-RAC
⚠Q803	BZ510100	TCATC3199Y	TRANSISTOR,SILICON	KTC3199_Y-AT
⚠Q804	BZ510009	TC3F042170	TRANSISTOR,SILICON	2SC4217(D,E)-RAC
⚠Q805	BZ510100	TCATC3199Y	TRANSISTOR,SILICON	KTC3199_Y-AT
⚠Q806	BZ510009	TC3F042170	TRANSISTOR,SILICON	2SC4217(D,E)-RAC
⚠Q807	BZ510100	TCATC3199Y	TRANSISTOR,SILICON	KTC3199_Y-AT
Q1501	BZ510109	TCAA3875SY	TRANSISTOR,SILICON	KTC3875S_Y_RTK
Q1502	BZ510109	TCAA3875SY	TRANSISTOR,SILICON	KTC3875S_Y_RTK
Q1503	BZ510109	TCAA3875SY	TRANSISTOR,SILICON	KTC3875S_Y_RTK
Q1702	BZ510069	TCATC31980	TRANSISTOR,SILICON	KTC3198-AT(Y,GR)
⚠Q1705	BZ510098	T220033260	FET	2SK3326(2)
⚠Q1706	BZ510070	TCAT032034	TRANSISTOR,SILICON	KTC3203_Y-AT
Q2201	BZ510071	TNAAB05003	COMPOUND TRANSISTOR	KRC102SRTK
Q2202	BZ510071	TNAAB05003	COMPOUND TRANSISTOR	KRC102SRTK
Q2203	BZ510071	TNAAB05003	COMPOUND TRANSISTOR	KRC102SRTK
Q2601	BZ510112	T67J1036K0	TRANSISTOR,SILICON	2SA1036KT146
Q2602	AE003592	T67J048TL0	TRANSISTOR,SILICON	2SA2048TL
Q2603	BZ510113	T27T030180	FET	2SK3018T106
Q2604	BZ510113	T27T030180	FET	2SK3018T106
Q2605	BZ510113	T27T030180	FET	2SK3018T106

ELECTRICAL REPLACEMENT PARTS LIST

Location No.	TSB P/N	Reference No.		Description
		TRANSISTORS		
Q3001	BZ510109	TCAA3875SY	TRANSISTOR,SILICON	KTC3875S_Y_RTK
⚠Q3002	BZ510105	TCAT03209Y	TRANSISTOR,SILICON	KTC3209_Y-AT
⚠Q3003	BZ510105	TCAT03209Y	TRANSISTOR,SILICON	KTC3209_Y-AT
Q3004	BZ510109	TCAA3875SY	TRANSISTOR,SILICON	KTC3875S_Y_RTK
⚠Q3005	AD301934	TBA0013660	TRANSISTOR,SILICON	KTB1366(O,Y)
Q3006	BZ510109	TCAA3875SY	TRANSISTOR,SILICON	KTC3875S_Y_RTK
⚠Q3007	BZ510057	TAAT01281Y	TRANSISTOR,SILICON	KTA1281_Y
Q3008	BZ510107	TPAAA05001	COMPOUND TRANSISTOR	KRA101SRTK
Q3009	BZ510071	TNAAB05003	COMPOUND TRANSISTOR	KRC102SRTK
Q3010	BZ510105	TCAT03209Y	TRANSISTOR,SILICON	KTC3209_Y-AT
Q3011	BZ510109	TCAA3875SY	TRANSISTOR,SILICON	KTC3875S_Y_RTK
⚠Q3014	BZ510105	TCAT03209Y	TRANSISTOR,SILICON	KTC3209_Y-AT
Q3015	BZ510109	TCAA3875SY	TRANSISTOR,SILICON	KTC3875S_Y_RTK
Q4004	BZ510109	TCAA3875SY	TRANSISTOR,SILICON	KTC3875S_Y_RTK
Q4201	BZ510109	TCAA3875SY	TRANSISTOR,SILICON	KTC3875S_Y_RTK
Q4202	BZ510072	TPAAC05002	COMPOUND TRANSISTOR	KRA103SRTK
Q4203	BZ510109	TCAA3875SY	TRANSISTOR,SILICON	KTC3875S_Y_RTK
Q4204	BZ510067	TNAAC05002	COMPOUND TRANSISTOR	KRC103SRTK
Q4210	BZ510108	TAAA1504SY	TRANSISTOR,SILICON	KTA1504S_Y_RTK
Q4211	BZ510109	TCAA3875SY	TRANSISTOR,SILICON	KTC3875S_Y_RTK
Q4212	BZ510108	TAAA1504SY	TRANSISTOR,SILICON	KTA1504S_Y_RTK
Q4501	BZ510109	TCAA3875SY	TRANSISTOR,SILICON	KTC3875S_Y_RTK
Q4502	BZ510109	TCAA3875SY	TRANSISTOR,SILICON	KTC3875S_Y_RTK
Q4503	BZ510072	TPAAC05002	COMPOUND TRANSISTOR	KRA103SRTK
Q4504	BZ510070	TCAT032034	TRANSISTOR,SILICON	KTC3203_Y-AT
Q4505	BZ510073	TAATA12660	TRANSISTOR,SILICON	KTA1266-AT(Y,GR)
Q4506	BZ510109	TCAA3875SY	TRANSISTOR,SILICON	KTC3875S_Y_RTK
Q4507	BZ510109	TCAA3875SY	TRANSISTOR,SILICON	KTC3875S_Y_RTK
Q4509	BZ510108	TAAA1504SY	TRANSISTOR,SILICON	KTA1504S_Y_RTK
Q4511	BZ510108	TAAA1504SY	TRANSISTOR,SILICON	KTA1504S_Y_RTK
Q8002	BZ510109	TCAA3875SY	TRANSISTOR,SILICON	KTC3875S_Y_RTK
Q8006	BZ510109	TCAA3875SY	TRANSISTOR,SILICON	KTC3875S_Y_RTK
Q8007	BZ510067	TNAAC05002	COMPOUND TRANSISTOR	KRC103SRTK
Q8102	BZ510108	TAAA1504SY	TRANSISTOR,SILICON	KTA1504S_Y_RTK
Q8103	BZ510108	TAAA1504SY	TRANSISTOR,SILICON	KTA1504S_Y_RTK
Q8104	BZ510108	TAAA1504SY	TRANSISTOR,SILICON	KTA1504S_Y_RTK
Q9601	BZ510045	TNYJD05001	COMPOUND TRANSISTOR	DTC144EKAT146
Q9602	BZ510112	T67J1036K0	TRANSISTOR,SILICON	2SA1036KT146
		COILS &TRANSFORMERS		
L001	BZ310001	021673101J	COIL	100 UH
L301	BZ310005	02167D101K	COIL	100 UH
L402	BZ310063	022100027A	COIL,LINEARITY	ELH5L4113
L403	BZ310004	021679472K	COIL	4.7 MH
L601	BZ310041	02167F101J	COIL	100 UH
L602	BZ310005	02167D101K	COIL	100 UH
L603	BZ310118	02AHB9A972	CORE,FERRITE	W5T29X7.5X19
L604	BZ310118	02AHB9A972	CORE,FERRITE	W5T29X7.5X19
L804	BZ310005	02167D101K	COIL	100 UH
L1501	BZ310141	02167F100J	COIL	10 UH
L1502	BZ310043	021LA6150K	COIL	15 UH
L1504	BZ310170	021673151K	COIL	150 UH
L1505	BZ310042	021LA6101K	COIL	100 UH
L1506	BZ310042	021LA6101K	COIL	100 UH
⚠L1701	AE003611	029X000116	COIL,LINE FILTER	SS28V-R20130
⚠L1703	BZ310066	028R200024	COIL,DEGAUSS	8R200024
L1704	AD301539	02AHB0A0A4	CORE FERRITE	W5T_20X10X10A
L3001	AD301785	02167E100K	COIL	10 UH
L4001	BZ310191	02167F2R2J	COIL	2.2 UH
L4002	BZ310118	02AHB9A972	CORE,FERRITE	W5T29X7.5X19
L4205	BZ310041	02167F101J	COIL	100 UH
L4502	BZ310114	031626009R	COIL,BIAS OSC	1626009
L4504	BZ310041	02167F101J	COIL	100 UH
L4505	BZ310040	02167F470J	COIL	47 UH
L4506	BZ310040	02167F470J	COIL	47 UH
L4509	BZ310005	02167D101K	COIL	100 UH
L5501	BZ310042	021LA6101K	COIL	100 UH
L5502	BZ310039	02167F220J	COIL	22 UH
L5503	BZ310039	02167F220J	COIL	22 UH
L5504	BZ310039	02167F220J	COIL	22 UH
L8001	BZ310041	02167F101J	COIL	100 UH
L8002	BZ310042	021LA6101K	COIL	100 UH

ELECTRICAL REPLACEMENT PARTS LIST

Location No.	TSB P/N	Reference No.		Description
		COILS &TRANSFORMERS		
L8003	BZ310041	02167F101J	COIL	100 UH
L8102	AE000828	02167F1R0K	COIL	1 UH
L8103	AE000828	02167F1R0K	COIL	1 UH
L8104	AE000828	02167F1R0K	COIL	1 UH
T401	BZ310172	045013003J	TRANS,HORIZONTAL DRIVE	ETH14Y47AY
⚠T1701	AD301935	048142065S	TRANSFORMER,SWITCHING	8142065S
		JACKS		
⚠J801	AD301936	066F130021	SOCKET,CATHODE RAY,TUBE	ISHS62S
⚠J2201	AE003431	060J131016	HEADPHONE JACK	MSJ-2000_AG
J2202	AE002949	060J421036	RCA JACK	MTJ-032-05A-30-FE
J2203	AE002950	060J421037	RCA JACK	MTJ-032-05A-32-FE
J2204	AE002951	060J421030	RCA JACK	MTJ-032-05A-31-FE
J4201	AE002759	060J431020	RCA JACK	MSP-213V2-432_NI_LF
J4202	AE002758	060J411031	RCA JACK	MSP-213V1-432_NI_LF
J8007	AE003568	060J401102	RCA JACK	MSP-251V-05NI-FE-LF
		SWITCHES		
SW101	BZ612016	0508S11001	SWITCH (LEAF)	LSA-1144EAU
SW2201	BZ612010	0504101T34	SWITCH,TACT	EVQ21505R
SW2202	BZ612010	0504101T34	SWITCH,TACT	EVQ21505R
SW2203	BZ612010	0504101T34	SWITCH,TACT	EVQ21505R
SW2204	BZ612010	0504101T34	SWITCH,TACT	EVQ21505R
SW2205	BZ612010	0504101T34	SWITCH,TACT	EVQ21505R
SW2206	BZ612010	0504101T34	SWITCH,TACT	EVQ21505R
SW2207	BZ612010	0504101T34	SWITCH,TACT	EVQ21505R
SW2251	BZ612010	0504101T34	SWITCH,TACT	EVQ21505R
SW2252	BZ612010	0504101T34	SWITCH,TACT	EVQ21505R
SW2253	BZ612010	0504101T34	SWITCH,TACT	EVQ21505R
SW2254	BZ612010	0504101T34	SWITCH,TACT	EVQ21505R
SW2255	BZ612010	0504101T34	SWITCH,TACT	EVQ21505R
SW2256	BZ612010	0504101T34	SWITCH,TACT	EVQ21505R
SW2257	BZ612010	0504101T34	SWITCH,TACT	EVQ21505R
SW2258	BZ612010	0504101T34	SWITCH,TACT	EVQ21505R
		VARIABLE RESISTORS		
VR404	BZ210218	V1K63H3BTE	VOLUME,SEMI FIXED	NVG6TLTAB222
VR1701	AD301937	V1K6314BTE	VOLUME,SEMI FIXED	NVG6TLTAB103
		P.C.BOARD ASSEMBLIES		
PCB010	AE007233	A5U001Q010	PCB ASS'Y	DME034A
PCB080	AE007235	A5U001Q080	PCB ASS'Y	CME029A
PCB110	AE007236	A5U001Q110	PCB ASS'Y	CCE024A
PCB130	AE007237	A5U001Q130	PCB ASS'Y	DME028A
PCB270	AE007238	A5U001Q270	PCB ASS'Y	CEE055A
PCBDM0	AE007239	A5U001QDM0	PCB ASS'Y	DED022A
		MISCELLANEOUS		
B401	BZ310121	024HT03553	CORE,BEADS	W5RH3.5X5X1.0
B402	BZ310121	024HT03553	CORE,BEADS	W5RH3.5X5X1.0
B403	BZ310121	024HT03553	CORE,BEADS	W5RH3.5X5X1.0
B1703	BZ310129	024HT03564	CORE,BEADS	W4BRH3.5X6X1.0
B2201	BZ310129	024HT03564	CORE,BEADS	W4BRH3.5X6X1.0
B2601	AE005476	0246C51024	CORE,BEADS	MMZ1608R102CT
B2602	AE005476	0246C51024	CORE,BEADS	MMZ1608R102CT
B2603	AE005476	0246C51024	CORE,BEADS	MMZ1608R102CT
B2604	AE005476	0246C51024	CORE,BEADS	MMZ1608R102CT
B2605	AE005476	0246C51024	CORE,BEADS	MMZ1608R102CT
B4001	AE005476	0246C51024	CORE,BEADS	MMZ1608R102CT
B4002	AE005476	0246C51024	CORE,BEADS	MMZ1608R102CT
B4003	AE005476	0246C51024	CORE,BEADS	MMZ1608R102CT
B4004	AE005476	0246C51024	CORE,BEADS	MMZ1608R102CT
B4005	AE005476	0246C51024	CORE,BEADS	MMZ1608R102CT
B4006	AE005476	0246C51024	CORE,BEADS	MMZ1608R102CT
B4007	AE005476	0246C51024	CORE,BEADS	MMZ1608R102CT
B4008	AE005476	0246C51024	CORE,BEADS	MMZ1608R102CT
B4009	AE005476	0246C51024	CORE,BEADS	MMZ1608R102CT
B4010	AE005476	0246C51024	CORE,BEADS	MMZ1608R102CT
B8001	BZ310122	024HT03563	CORE,BEADS	W4BRH3.5X6X1.0X2
B8103	AE005476	0246C51024	CORE,BEADS	MMZ1608R102CT
B9601	AE005476	0246C51024	CORE,BEADS	MMZ1608R102CT
BL001	BZ310014	023C00022A	COIL,BALUN	HPN-01
BT001	AE005640	141R004016	BATTERY,MANGAN	GR03X-SP2
BT002	AE005640	141R004016	BATTERY,MANGAN	GR03X-SP2
CD002	BZ614411	06CU011902	CORD,CONNECTOR	CU011902
CD303	AE006531	06C3149004	CORD,CONNECTOR	C3149004

ELECTRICAL REPLACEMENT PARTS LIST

Location No.	TSB P/N	Reference No.		Description
			MISCELLANEOUS	
CD602	AD302218	06CU291701	CORD,CONNECTOR	CU291701
CD603	AE000133	06CU284501	CORD,CONNECTOR	CU284501
CD604	AE000132	06CU282401	CORD,CONNECTOR	CU282401
CD802	BZ614310	WCL6844038	FLAT CABLE	AWM2468 AWG26 5C GRAY 440MM
CD803	AE005637	06CH823004	CORD,CONNECTOR	CH823004
CD805	AE005637	06CH823004	CORD,CONNECTOR	CH823004
CD806	AE007068	06CH013601	CORD,EIS CONNECTOR	CH013601
CD807	AE007050	06CH012801	CORD,EIS CONNECTOR	CH012801
CD808	AE006534	06CH011202	CORD,EIS CONNECTOR	CH011202
CP001	BZ614444	069D01001A	CONNECTOR PCB SIDE	003P-2100
CP101	BZ614289	06972C0010	CONNECTOR PCB SIDE	TMC-J12P-B2
CP303	AD301045	069S140419	CONNECTOR PCB SIDE	A2502WV2-4P
⚠ CP404	BZ614303	069S450089	CONNECTOR PCB SIDE	A1561WV2-A5P
CP601	AD301943	069S240639	CONNECTOR PCB SIDE	A2001WR2-4P
CP602	BZ614462	067U009039	WIRE HOLDER	B2013H02-9P
CP603	AD301944	067U008029	WIRE HOLDER	B2013H02-8P
CP604	AD301796	069S280629	CONNECTOR PCB SIDE	A2001WV2-8P
CP803	BZ614269	069S320010	CONNECTOR PCB SIDE	A2361WV2-2P
CP805	BZ614269	069S320010	CONNECTOR PCB SIDE	A2361WV2-2P
⚠ CD1702	AE006538	1209415910	CORD AC BUSH	9415910
CD1705	AE006535	06CH012403	CORD,EIS CONNECTOR	CH012403
CD2251	AE006532	06C3220703	CORD,CONNECTOR	C3220703
CD4001	AE006539	122H0O2601	CORD,JUMPER	2H0O2601
CD4002	AE006533	06C32B3305	CORD,CONNECTOR	C32B3305
CD4501	BZ614373	122F061502	CORD,JUMPER	2F061502
CD4503	AE007029	W9L6012042	FLAT CABLE	AWM2468 AWG26 2C BLACK 120MM
CD8101	AE000134	122H0C2204	CORD,JUMPER	2H0C2204
CP1702	AD301944	067U008029	WIRE HOLDER	B2013H02-8P
⚠ CP1704	BZ614283	069S420110	CONNECTOR PCB SIDE	A1561WV2-2P
CP1707	BZ614444	069D01001A	CONNECTOR PCB SIDE	003P-2100
CP1708	BZ614444	069D01001A	CONNECTOR PCB SIDE	003P-2100
CP2201	BZ614416	069S220629	CONNECTOR PCB SIDE	A2001WV2-2P
CP2601	AE003571	069GYOT119	CONNECTOR PCB SIDE	09-5000-024-001-001
CP2602	AE005934	069EV53030	CONNECTOR PCB SIDE	00_6232_005_006_800+
CP2603	AE005935	069EV63030	CONNECTOR PCB SIDE	00_6232_006_006_800+
CP4002	AE001341	069RYOT109	CONNECTOR PCB SIDE	52975-2492
CP4501	BZ614011	0697290620	CONNECTOR PCB SIDE	TOC-C09X-A1
CP4502	BZ614050	069J760029	CONNECTOR PCB SIDE	IMSA-9604S-06Z14
CP4503	AD301649	067U002019	WIRE HOLDER	B2013H02-2P
CP602B	BZ614458	069S290629	CONNECTOR PCB SIDE	A2001WV2-9P
CP603B	AD301796	069S280629	CONNECTOR PCB SIDE	A2001WV2-8P
CP8001	BZ614214	069S2B0629	CONNECTOR PCB SIDE	A2001WV2-11P
CP8002	AD301797	069J7C0029	CONNECTOR PCB SIDE	IMSA-9604S-12Z14
CP802A	BZ614276	067U005049	WIRE HOLDER	B2013H02-5P
CP802B	BZ614276	067U005049	WIRE HOLDER	B2013H02-5P
CP8101	AE006053	069J7C0589	CONNECTOR PCB SIDE	IMSA-9604S-12F
CP9603	AE006530	069QN4201A	CONNECTOR PCB SIDE	CLE9042-0101F
CP9604	AE001341	069RYOT109	CONNECTOR PCB SIDE	52975-2492
CUS011	BZ710148	800WFAA007	CUSHION B	
CUS012	BZ710149	800WFAA008	CUSHION C	
EL001	BZ614044	124120301A	EYE LET	XRY20X30BD
EL002	BZ614043	124116281A	EYE LET	XRY16X28BD
EL003	BZ614044	124120301A	EYE LET	XRY20X30BD
EL004	BZ614043	124116281A	EYE LET	XRY16X28BD
⚠ F1701	BZ614422	081PC6R305	FUSE	51MS063L
⚠ FB401	AE006458	043220059F	TRANSFORMER,FLYBACK	FJN20A003_M
FH1701	AE002634	06710T0009	HOLDER,FUSE	EYF-52BCY
FH1702	AE002634	06710T0009	HOLDER,FUSE	EYF-52BCY
OS2201	AD301949	0773071003	REMOTE RECEIVER	RPM7138-WH10
⚠ RY1701	AD300114	0560V20115	RELAY	ALKS321
⚠ SP351	AE006459	070N546012	SPEAKER	YDP4010-2
⚠ SP352	AE006459	070N546012	SPEAKER	YDP4010-2
TM101	AE006536	076D0KH030	TRANSMITTER	ORT204N7404715-J
⚠ TU001	AE006069	0163300018	RF UNIT	115-V-KA35ARB
⚠ TH1701	BZ410079	DF5EL3R0A0	DEGAUSS ELEMENT	ZPB45BL3R0A
⚠ V801	AE007069	098S210461	CRT W/DY	A51QDJ420X58
X101	BZ613006	100DA32R01	CRYSTAL	DT-26
X102	BZ613033	100CT01403	CRYSTAL	HC-49/U-S
X601	AD301951	100CT3R532	CRYSTAL	HC-49/U-S
X4001	AD301803	100BT02701	CRYSTAL	HC-49U/S
X4501	BZ613017	100CT3R502	CRYSTAL	HC-49/U

ELECTRICAL REPLACEMENT PARTS LIST

RESISTOR

RC.....	CARBON RESISTOR

CAPACITORS

CC.....	CERAMIC CAPACITOR
CE.....	ALUMI ELECTROLYTIC CAPACITOR
CP.....	POLYESTER CAPACITOR
CPP.....	POLYPROPYLENE CAPACITOR
CPL.....	PLASTIC CAPACITOR
CMP.....	METAL POLYESTER CAPACITOR
CMPL.....	METAL PLASTIC CAPACITOR
CMPP.....	METAL POLYPROPYLENE CAPACITOR

TOSHIBA CORPORATION
1-1, SHIBAURA 1-CHOME, MINATO-KU, TOKYO 105-8001, JAPAN